WELCOME

by

K.K.VERMA Superintending Engineer

Public Health Engineering Departmental Circle

SIRSA

CANAL BASED WATER SUPPLY SCHEME

Sources of Raw Water For Community or Public Water Supplies

	Surface Waters		**Ground Waters**
1.	Rivers / Canals	1.	Springs
2.	Lakes	2.	Infiltration Galleries
3.	Impounding Reservoirs	3.	Wells

Common Impurities -

1 Suspended Impurities

a) Bacteria – Some of them may cause Diseases

b) Algae , Protozoa – Gives Colour , Odour ,Turbidity

c) Silt Clay etc. – Cause turbidity and murkiness

2 Dissolved Impurities

a) Salts - Ca or Ma (Calcium or Magnesium) – Carbonates and Bi-carbon cause alkalinity and hardness

- Na (Sodium) - Carbonates and Bi-carbonates cause alkalinity and softening

- Chlorides cause forming in steam boilers

- Fluorides cause mottled enamel of teeth

b) Metals and their compounds

Iron	- Red water , corrosive hardness and taste
Manganese	- Black or Brown colour
Lead & Arsenic	- Poisoning

c) Gases

Oxygen	– Corrosiveness
CO_2	–Corrosiveness and acidity
H_2S	–Corrosiveness, odour and acidity
Ammonia	–Taste and Odour
Chloramine	–Taste and Odour

d) Vegetables and Organic Materials – Cause colour , odour and acidity

Objectives of Community Water Supplies

1. To supply safe and wholesome water to consumers
2. To supply water in adequate quantity
3. To make water easily available to consumers so as t encourage personal and house hold cleanliness .

CHARACTERISTICS OF POTABLE WATER

RECOMMENDED GUIDELINES FOR PHYSICAL AND CHEMICAL PARAMETERS			
Sr. No.	Characteristics	Acceptable	Cause for Rejection
1	Turbidity (NTU)	1	10
2	Colour (Units on Platinum Cobalt scale)	5	25
3	Taste and Odour	Unobjectionable	Objectionalbe
4	pH	7.0 to 8.5	<6.5 or > 9.2
5	Total dissolved solids (mg/l)	500	2000
6	Total hardness (as $CaCo_3$) (mg/l)	200	600
7	Chlorides (as Cl) (mg/l)	200	1000
8	Sulphates (as SO_4) (mg/l)	200	400
9	Fluorides (as F) (mg/l)	1	1.5
10	Nitrates (as NO_3) (mg/l)	45	45
11	Calcium (as Ca) (mg/l)	75	200
12	Magnesium (as Mg) (mg/l)	≤ 30	150
If there are 250 mg/l of sulphates, Mg content can be increased to a maximum of 125 mg/l with the reduction of sulphates at the rate of 1 unit per every 2.5 units of sulphates			
13	Iron (as Fe) (mg/l)	0.1	1.0
14	Manganese (as Mn) (mg/l)	0.05	0.5
15	Copper (as Cu) (mg/l)	0.05	1.5

16	Aluminium (as Al) (mg/l)	0.03	0.2
17	Alkalinity (mg/l)	200	600
18	Residual Chlorine (mg/l)	0.02	> 1.0
19	Zinc (as Zn) mg/l)	5.0	15.0
20	Phenolic compounds (as Phenol) (mg/l)	0.001	0.002
21	Anionic detergents (mg/l) (as MBAS)	0.02	1.0
22	Mineral Oil (mg/l)	0.01	0.03
	TOXIC MATERIALS		
23	Arsenic (as As) (mg/l)	0.01	0.05
24	Cadmium (as Cd) (mg/l)	0.01	0.01
25	Chromium (as hexavalent Cr) (mg/l)	0.05	0.05
26	Cyanides (as CN) (mg/l)	0.05	0.05
27	Lead (as Pb) (mg/l)	0.05	0.05
28	Selenium (as Se) (mg/l)	0.01	0.01
29	Mercury (total as Hg) (mg/l)	0.001	0.001
30	Polynuclear aromatic hydrocarbons (PAH) ug/l)	0.2	0.2
31	Pesticides (total, mg/l)	Absent	Refer to WHO guidelines for drinking water quality Vol I. – 1993
	RADIO ACTIVITY +		
32	Gross Alpha activity (Bq/l)	0.1	0.1
33	Gross Beta activity (Bq/l)	1.0	1.0

BACTERIOLOGICAL QUALITY OF DRINKING WATER	
Characteristics	Acceptable
All water intended for drinking	
E.coli or thermotolerant coliform bacteria [b,c]	Must not be detectable in any 100-ml sample
Treated water entering the distribution system	
E.coli or thermotolerant coliform bacteria [b,c]	Must not be detectable in any 100-ml sample
Total coliform bacteria	Must not be detectable in any 100-ml sample
Treated water in the distribution system	
E.coli or thermotolerant coliform bacteria [b]	Must not be detectable in any 100-ml sample
Total coliform bacteria	Must not be detectable in any 100-ml sample. In case of large supplies, where sufficient samples are examined, must not be present in 95% of samples taken throughout any 12 month period.

Treatment includes

Settling, aeration, flocculation & clarification, filtration, disinfection, softenin deferrization, deflouridation, water conditioning , Combination of no. of treatments to su R/Water quality . These treatments can be summed up as

1. Storage
2. Pre-chlorination
3. Accretion
4. Rapid mixing
5. Flocculation (slow mixing)
6. Sedimentation
7. Slow sand filtration
8. Rapid sand filtration
9. Softening
10. Post-chlorination
11. Demineralization

These can be adopted singly or in combination as

Surface Water (If Turbidity less than 10 NTU and free from Taste and Odour)_

(NTU-Naphelometric Turbidity Unit)

1 ⟶ 10 ⟶

Surface Water (If Turbidity less than 50 NTU)

1 ⟶ 6 ⟶ 7 ⟶ 10

Surface Water (Highly Polluted and laden with algae or microorganisms)

1 ⟶ 2 ⟶ 3 ⟶ 4 ⟶ 5 ⟶ 6 ⟶ 7 ⟶ 8 ⟶ 10

Surface Water (Waters of Low Turbidity 10-15 NTU with low concentration of suspended matter say up to 50 ppm)

1 ⟶ 4 ⟶ 5 ⟶ 8 ⟶ 10 (5 is not compulsory)

5 **Ground Water** (Turbidity Less than 10 NTU free from colour and odour)

→ **10** →

6 **Ground Water** (with excessive iron , dissolved CO_2 and odorous gases)

3 → **4** → **5** → **6** → **8** → **10**

7 **If with excessive hardness needs softening before Rapid Sand**

→ **9** → **8** → **10**

8 **If dissolved solids are present ,demineralization by ion exchange required**

→ **8** → **9** → **10** → **11**

Sedimentation Done to

remove heavier suspended matter from water and achieved by allow water to remain in quiescent in large holding tanks .

Aeration **Done to**

i) to add oxygen – for imparting freshness.

ii) Expulsion of CO_2 , Hydrogen Sulphide & other volatile gases – causing taste & odour.

iii) to precipitate impurities like iron & manganese

Limitation Not highly effective for removal of taste & odour.

Can be used with chlorine & activated carbon to remove taste and odour

Achieved i) by Increasing area of contact with atmospheric oxygen.

ii) agitating surface thus to reduce thickness of sheet of flow

iii) By increasing time of contact.

COAGULATION & FLOCCULATION

- Removal of very fine and light colloidal impurities such as clay particles, gels and emulsions- difficult to remove with ordinary sedimentation. So to achieve this, certain chemicals called coagulants are added which when thoroughly mixed form wooly masses, precipitate enmeshing the suspended particles, become heavier and finally settle down. This entire process is known as coagulations. Coagulation takes place in 2 stages-

FIRST STAGE- Marked by neutralization of electric charges. as coagulant- dissolved- positive charges Al & Fe irons neutralize –ve charged- turbidity clay/ colour/ gel/ colloidal particles [for this stage rapid mixing is required] combine into single mass.

- **SECOND STAGE -** The particles so turned are molecular in size. Now if slow mixing is done- particles flocculate and grow bigger in size floc becomes heavier and carried down thus removed by sedimentation.

DOSAGE OF COAGULANTS-

- depends upon no. of factors such as- turbidity colour, pH value time of settlement and temp of water. Normally vary from 0.03 to 0.13 gm/ litre.
- Though quantity is directly proportional to turbidity but still no direct relation available, quantity further increases with lower temp, if pH lower than optimum- increases, if pH too much then also quantity increases If colour present more quantity required.
- Coagulation done when turbidity is more than 50 NTU & quantity of coagulant to be used is judged by jar test.

COMMONLY USED COAGULANTS

- Salts of aluminum -Alum – Aluminium Sulphate –$AL_2(SO_4)_3$ 18 H_2O
- Sodium Aluminate
- Liquid Alum
- Iron salts – ferrous sulphate, ferric sulphate, ferric chloride, chlorinated copper

OPTIMUM PH ZONE

Certain zone of ph – given dose produces best results in minimum time.

- **Quantity of coagulant**
- Determined by trial – will further vary with temperature & time of mixing
- Jar Test _ 6 Jars – mixing peddles are rotated @30 to 40 rpm for about 5 minutes and then slowly for 15 minutes
- Minimum quantity is that which requires 15-30 minutes in summer & 30-60 in winter
- pH value has considerable effect on dose of coagulation.
- Addition of coagulants in excess of the determined minimum quantity may increase bactericidal efficiency.

Filtration

Aims at removal of suspended organic , inorganic, bacterial impurities involving various actions in Filters such as :-

Straining – Suspended particles larger than voids size get arrested

Sedimentati – Voids act as tini sedimentation tanks in which fine colloidal material settle down

Biological Action - The organic impurities in water (Algae, plankton) are food for micro organisms , they are acted upon by these organisms and are altered to make changes i chemical and biological properties of water . The arrested organic impurities form a laye on top – Schmutzdecke or dirty skin –absorbs impurities

Electrolytic Action- Oppositely charged particles of impurities and sand particles attrac each other.

Disinfections

Processes discussed till now such as storage, coagulation, flocculation, sedimentatio filtration, aeration & softening etc. can only produce water aesthetically acceptable b cannot be relied upon to provide safe water. For utmost safety at consumer end, disinfection water has to be done for killing of disease producing organisms. Bacteria, viruses & amoeb cysts are main three type of organisms. So disinfection is concern over either destruction inactivation of these organisms & other pathogens responsible for water borne diseases.

Some of the methods applied for disinfection are –

i) Physical method such as thermal treatment & ultrasonic waves.

ii) Chemicals – such as chlorine & its compounds , Bromine, iodine, potassiu permanganate, ozone , metals like silver etc.

iii) Radiation

Disinfection & sterilization are different processes, where disinfection aims at selective destruction of disease producing organisms , sterilization involved to completely destroy or inactivate all micro-organisms including bacteria, amoebic cysts, viruses, algae & spores.

Properties of Good disinfectants

i) Capable of destroying the pathogenic organisms within contact time & not mu affected by physical & chemical prospects of water such as pH, temperature and minerals

ii) should not leave products of reaction which render water toxic or impart colo odour etc.

iii) Leaves some residual concentrations

iv) Easy to detect

Factors affecting efficiency of disinfectants.

i) Type condition, concentration and distribution of organisms.

ii) Type & concentration of disinfectant.

iii) Physical & chemical characteristics of water.

iv) Contact period

v) Temperature of water.

Chlorination

Chlorine with atomic weight 35.45. Melting point – 101.5^{0}C and Boiling Point 34.5^{0}C . Its greenish yellow in gaseous form and 2.5 times heavier than air.

Under pressure it is in Liquid form of amber colour , Oily and 15 times heavy than water

Dry chlorine – non-corrosive but moist Chlorine – highly corrosive

It is harmful for human- Effects lungs & eyes –

HOCL (Hypo chlorous acid) $H^+ + OCl^-$ HOCl is 80-100 times more Potent as disinfectant than OCl^- ion Concentration of HOCl Depends on pH, when pH of chlorinated water i above 3 which is normal cases chlorine exists as HOCl

at pH below – 5.5 – it is 100% HOCl

at pH > 9.5 – it is 100% OCl^-

pH 6 – 8 – it varies from 96% - 10% of HOCl

Combined chlorine – possess much low disinfectant properties – produced when fre chlorine reacts with compounds such as ammonia, proteins, amino acids and phenol etc.

$Cl_2 + H_2O$ → $HOCl + HCl$

$NH_3 + HOCl$ → $NH_2Cl + H_2O$

(mono chloramine)

$NH_2Cl + HOCl$ → $NHCl_2 + H_2O$

(Dichloramine)

$NHCl_2 + HOCl$ → $NCl_2 + H_2O$

(Trichloramine or Nitrogen chloride - no disinfectant value)

Chlorine Demand

Before any disinfection achieved Cl_2 consumed by inorganic and organic materials.

Sufficient time & dose required to satisfy – resulting in some unreacted chlorine calle
residual chlorine may be free or combined

Estimation done by either OT or OTA tests.

Orthotolodine test (OT) for total residual chlorine

Orthotolodine Arsenite (OTA) for free available chlorine

lidene test

of chlorinated water sample + 0.1 ml of orthotolidene sample(3 drops
r formed is noted after 5 min.
r will be yellow (free + combined chlorine).
paring this colour with a colour of known
tration chart the amount of residual Chlorine is obtained

Applied at different stages and thus known as

- Pre-chlorination
- Post chlorination
- De-chlorination
- Super chlorination
- Break point Chlorination

Application of chlorine done by

1. By addition of weak solution from bleaching powder.
2. By addition of weak solution of chlorine prepared by electrolyzing a solution of Bri
3. By addition of chlorine either gas or liquid.

Bleaching Powder contains 25 – 33% – available chlorine

Calcium Hypo chlorite – 65 – 70%. available chlorine

Chlorinators – Functions of chlorinators are

1. To regulate flow of gas at desired rate
2. To indicate rate of flow
3. To provide means of properly mixing the gas

Quantity of Bleaching to be added – (Calcium Oxi Chloride $CaOCl_2$)

$$\text{Dose of Bleaching Powder in Kg} = \frac{\text{Litres of Water x Dose in ppm}}{\text{1000,000 x \% Chlorine if Bleaching Powd}}$$

Types of Chlorinators – mainly two types Pressure Type and Vacuum Type

Maintenance of Cylinders – Mainly 4 points to keep in mind

1 Moisture

2 Impurities

3 Flexible Connections

4 Gaskets

The safety limit for a working environment permits the maximum allowable concentratio of chlorine in air of 1ppm by volume for an exposure period of 8 hours.

eration And Maintenance of Chlorination Equipment

rine leaks must be stopped immediately because chlorine is poisonous gas.
eover a chlorine leaks never stops by itself but becomes worse with time

rine cylinders and Chlorination room

mediately on receipt of cylinder or tonner, check it for leakages. If leakage is detec
n it.
ways store the cylinder and tonners in cool,dry,well ventilated place, away from sou
eat.
ver lift the cylinders by means of the valve protecting cap.

per construction and correct placement of equipment in the chlorination room can inate a number of maintenance problems. There should be adequate light and tilation in the chlorination room. **Direct heat should never applied to the cylinder .** checking leakage of chlorine use liquor ammonia (Torch)

ase of Emergency Neutralisation pit 2.5m*2m*2.5m to be provided inside the tonn m. Desired quantity of alkali and water should be maintained in the neutralisation p prine leaking out of cylinder should be led to neutralisation pit through a pipe weigh s open end to hold it under water.
cylinder should never be dumped into the pit, since it can float and allow chlorine t ape into air. For 908 kg of chlorine container capacity we take 1160 kg of caustic s 680 lt of volume of water.

Calculation for setting the knob of dozing pump capacity 5 Liters Per Hours				
(Assuming chorine in Hyposolution 12.5% in Gr-II)				
Sr.No.	Discharge of Pump in LPM	Knob of dozer to be set at % for various dozes of Residual chlorine		
		1.00PPM	2.0PPM	3.00PPM
1	100	1	2	3
2	150	1.5	3	4.5
3	200	2	4	6
4	250	2.5.	5	7
5	300	3	6	9
6	400	4	8	12
7	500	5	10	15
8	600	6	12	18
9	700	7	14	21
10	800	8	16	24
11	1000	10	20	30
12	1100	11	22	22
13	1200	12	24	24
14	1500	15	30	30
15	1600	16	32	48

16	1800	18	36	54
17	2000	20	40	60
18	2100	21	42	63
19	2200	22	44	66
20	2400	24	48	72
21	2600	26	52	78
22	2800	28	56	84
23	3000	30	60	90
24	3100	31	62	93
25	3200	32	64	96
26	3400	34	68	100
27	3600	36	72	
28	3800	38	76	
29	4000	40	80	
30	4200	42	84	
31	4400	44	88	
32	4600	46	92	
33	4800	48	96	
34	5000	50	100	
				K.K. Verma SE PHED Sirsa

Calculation for setting the knob of dozing pump capacity 5 Liters Per Hours					
(Assuming chorine in Hyposolution 9%)					
Sr.No.	Discharge of Pump in LPM	Knob of dozer to be set at % for various dozes of Residual chlorine			
		1.00PPM	1.5PPM	2.0PPM	3.00PPM
1	100	1	2	3	4
2	150	2	3	4	6
3	200	2.50	4	5	8
4	300	4	6	8	12
5	400	5	8	11	16
6	500	7	10	13	20
7	600	8	12	16	24
8	700	9	19	19	28
9	800	11	16	21	32
10	1000	13	20	27	40
11	1100	15	22	29	44
12	1200	16	24	32	48
13	1500	20	30	40	60
14	1600	21	32	43	64
15	1800	24	36	48	72

16	2000	27	40	53	80
17	2100	28	42	56	84
18	2200	29	44	59	88
19	2400	32	48	64	96
20	2600	32	52	69	0
21	2800	37	56	75	0
22	3000	40	60	80	0
23	3100	41	62	83	0
24	3200	43	64	85	0
25	3400	45	68	91	0
26	3600	48	72	96	0
27	3800	51	0	0	0

Calculation for setting the knob of dozing pump capacity 5 Liters Per Hours					
(Assuming chorine in Hyposolution 6%)					
Sr.No.	Discharge of Pump in LPM	Knob of dozer to be set at % for various dozes of Residual chlorine			
		1.00PPM	1.5PPM	2.0PPM	3.00PPM
1	100	2	3	3	6
2	150	3	4	4	9
3	200	4.00	6	6	12
4	250	5	7	8	15
5	300	6	9	10	18
6	400	8	12	12	24
7	500	10	15	16	30
8	600	12	18	20	36
9	700	14	21	24	42
10	800	16	24	28	48
11	1000	20	30	32	60
12	1100	22	33	40	66
13	1200	24	36	44	72
14	1500	30	45	48	90
15	1600	32	48	60	96

16	1800	36	54	64	0
17	2000	40	60	72	0
18	2100	42	63	80	0
19	2200	44	66	84	0
20	2400	48	72	88	0
21	2600	52	78	96	0
22	2800	56	84	0	0
23	3000	60	90	0	0
24	3100	62	93	0	0
25	3200	64	0	0	0
26	3400	68	0	0	0
27	3600	72	0	0	0
28	3800	76	0	0	0
29	4000	80	0	0	0

Calculation for Twin Oxide					
Sr.No.	Discharge of Pump in LPM	Quantity of twin oxide chemical solution for various dozes			
		0.002 PPM	0.003 PPM	0.004 PPM	
1	100	45ML	60ML	100ML	3 liters/hours 60%
2	150	65ML	90ML	150ML	3 liters/hours 60%
3	200	90ML	120ML	200ML	3 liters/hours 60%
4	250	110ML	150ML	250ML	3 liters/hours 60%
5	300	130ML	180ML	300ML	3 liters/hours 60%
6	400	170ML	240ML	400ML	3 liters/hours 60%
7	500	210ML	300ML	500ML	3 liters/hours 60%
8	600	250ML	360ML	600ML	3 liters/hours 60%
9	700	300ML	420ML	700ML	3 liters/hours 60%
10	800	340ML	480ML	800ML	3 liters/hours 60%
11	1000	425ML	600ML	1000ML	3 liters/hours 60%
12	1100	465ML	660ML	1100ML	3 liters/hours 60%
13	1200	500ML	720ML	1200ML	3 liters/hours 60%
14	1500	630ML	900ML	1500ML	3 liters/hours 60%
15	1600	670ML	960ML	1600ML	3 liters/hours 60%

16	1800	750ML	1080ML	1800ML	3 liters/hours 60%
17	2000	840ML	1200ML	2000ML	3 liters/hours 60%
18	2100	880ML	1260ML	2100ML	3 liters/hours 60%
19	2200	920ML	1320ML	2200ML	3 liters/hours 60%
20	2400	1000ML	1440ML	2400ML	3 liters/hours 60%
21	2600	1090ML	1560ML	2600ML	3 liters/hours 60%
22	2800	1170ML	1680ML	2800ML	3 liters/hours 60%
23	3000	1250ML	1800ML	3000ML	3 liters/hours 60%
24	3100	1290ML	1860ML	3100ML	3 liters/hours 60%
25	3200	1340ML	1920ML	3200ML	3 liters/hours 60%
26	3400	1420ML	2040ML	3400ML	3 liters/hours 60%
27	3600	1500ML	2160ML	3600ML	3 liters/hours 60%
28	3800	1590ML	2280ML	3800ML	3 liters/hours 60%
29	4000	1670ML	2400ML	4000ML	3 liters/hours 60%
30	4200	1750ML	2520ML	4200ML	3 liters/hours 60%
31	4400	1840ML	2640ML	4400ML	3 liters/hours 60%
32	4500	1880ML	2700ML	4500ML	3 liters/hours 60%
33	5000	2080ML	3000ML	5000ML	3 liters/hours 60%
34	5500	2290ML	3300ML	5500ML	3 liters/hours 60%
35	6000	2500ML	3600ML	6000ML	3 liters/hours 60%

Quantity of Bleaching Powder to be added for different PPM of chlorine in various quantity of supplies					
Sr.No.	Daily water supply in Lac Litres	Bleaching dose in Kg for available Chlorine			
		1.0 Ppm	1.5 Ppm	2.0 Ppm	3.0 Ppm
1	0.50	0-165	0-250	0-330	0-500
2	0.75	0-250	0-375	0-500	0-750
3	1.00	0-330	0-500	0-660	1-000
4	1.25	0-400	0-600	0-800	1-250
5	1.50	0-500	0-750	1-000	1-500
6	1.75	0-575	0-875	1-150	1-750
7	2.00	0-660	1-000	1-320	2-000
8	2.25	0-750	1-125	1-500	2-250
9	2.50	0-830	1-250	1-660	2-500
10	2.75	0-900	1-350	1-800	2-750
11	3.00	1-000	1-500	2-000	3-000
12	3.50	1-150	1-725	2-300	3-500
13	4.00	1-300	2-000	2-600	4-000
14	4.50	1-500	2-250	3-000	4-500
15	5.00	1-650	2-500	3-300	5-000
16	5.50	1-800	2-700	3-600	5-500

17	6.00	2-000	3-000	4-000	6-000
18	6.50	2-150	3-225	4-300	6-500
19	7.00	2-300	3-500	4-600	7-000
20	7.50	2-500	3-750	5-000	7-500
21	8.00	2-650	4-000	5-300	8-000
22	8.50	2-800	4-200	5-600	8-500
23	9.00	3-000	4-500	6-000	9-000
24	9.50	3-150	4-725	6-300	9-500
25	10.00	3-300	5-000	6-600	10-000
26	10.50	3-500	5-250	7-000	10-500
27	11.00	3-650	5-500	7-300	11-000
28	11.50	3-800	5-700	7-600	11-500
29	12.00	4-000	6-000	8-000	12-000
30	12.50	4-150	6-225	8-300	12-500
31	13.00	4-300	6-450	8-600	13-000
32	14.00	4-650	7-000	9-300	14-000
33	15.00	5-000	7-500	10-000	15-000
34	16.00	5-300	8-000	10-600	16-000
35	17.00	5-650	8-500	11-300	17-000
36	18.00	6-000	9-000	12-000	18-000
37	19.00	6-300	9-500	12-600	19-000
38	20.00	6-650	10-000	13-300	20-000

Examination /Tests of Water

Physical , Chemical and Biological

Physical Tests – For Turbidity , Colour , Odour ,Taste

Chemical Tests - For Total , Suspended and Dissolved Solids , Acidity , alkalinity pH value , Chloride and Nitrogen , Hardness , Iron, Manganese and other metals

Biological –includes tests for B-Coli, Total counts and plankton density .

Sample Taking

1)	Surface Stream	:-	Should be taken at least 18” below surface
2)	Tap or Faucet	;-	Sufficient water to waste ,
3)	Pump	:-	Enough water to be wasted to empty all pum connections

Canal Based Water Supply Schemes

Various features to discuss

I. Various Components

II. Purpose of components

III. Design & Planning of Project

IV. Design standards

V. Points to be taken care of in Construction

VI. Maintenance Tips – Check List

VII. Design Calculations for Typical Scheme

DESIGN OF CANAL BASED WATER SUPPLY

I Various Components of a canal based Water Works

i) Inlet Channel (Raw Water Carrier)

ii) Storage and Sedimentation Tank (S/S Tank)

iii) High level Tank (HLT)

iv) Coagulation Sedimentation Plant

v) Filtering Units (Filter Beds)

vi) Clear Water Tank (CWT)

vii) Suction and Scour Wells

} HEAD WORKS

viii) Pump Chamber

ix) Machinery

x) Over Head Service Reservoir (OHSR)

xi) Distribution system

LAY OUT PLAN of CANAL BASED RURAL WATER SUPPLY SCHEME WITH SS Filters

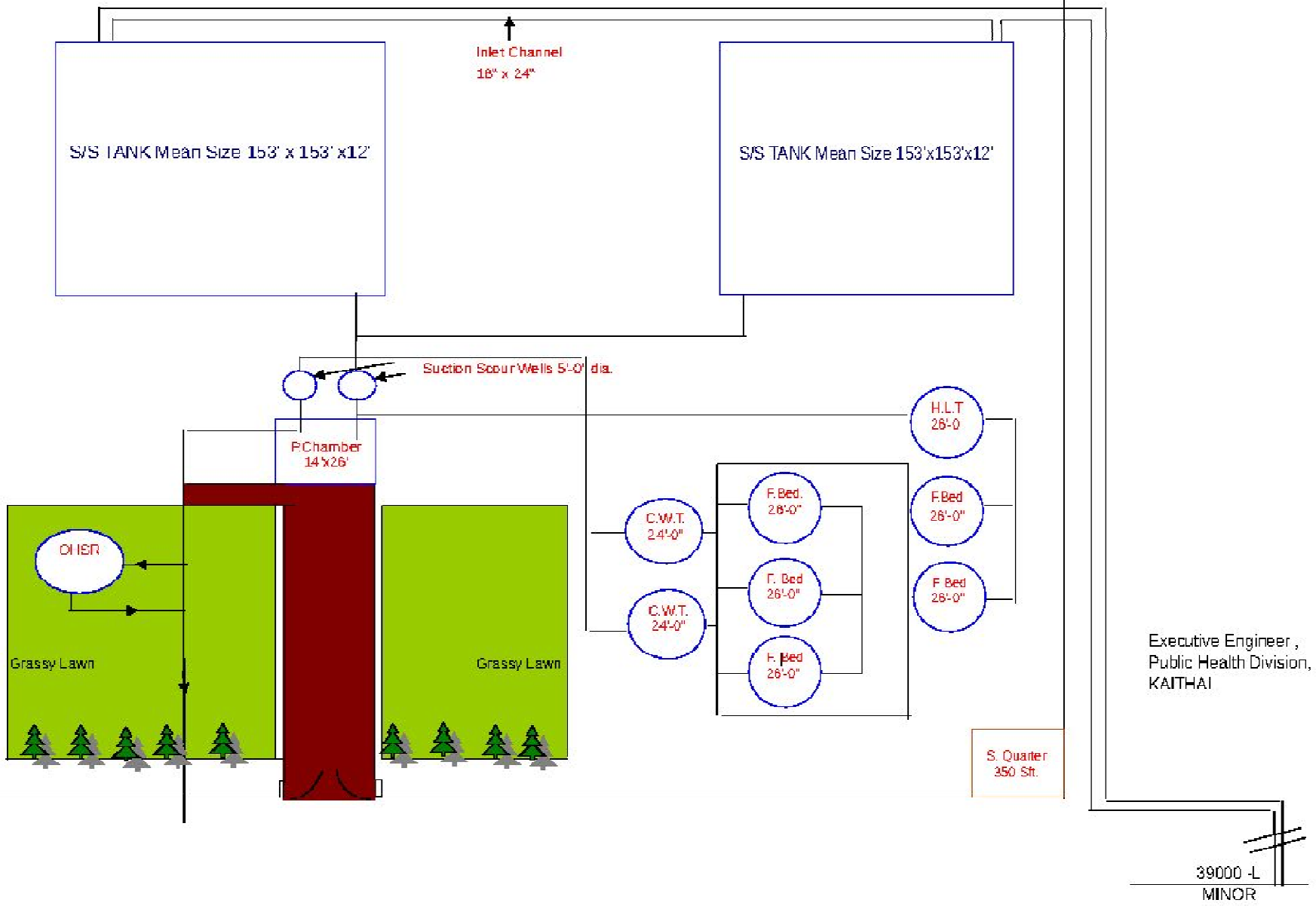

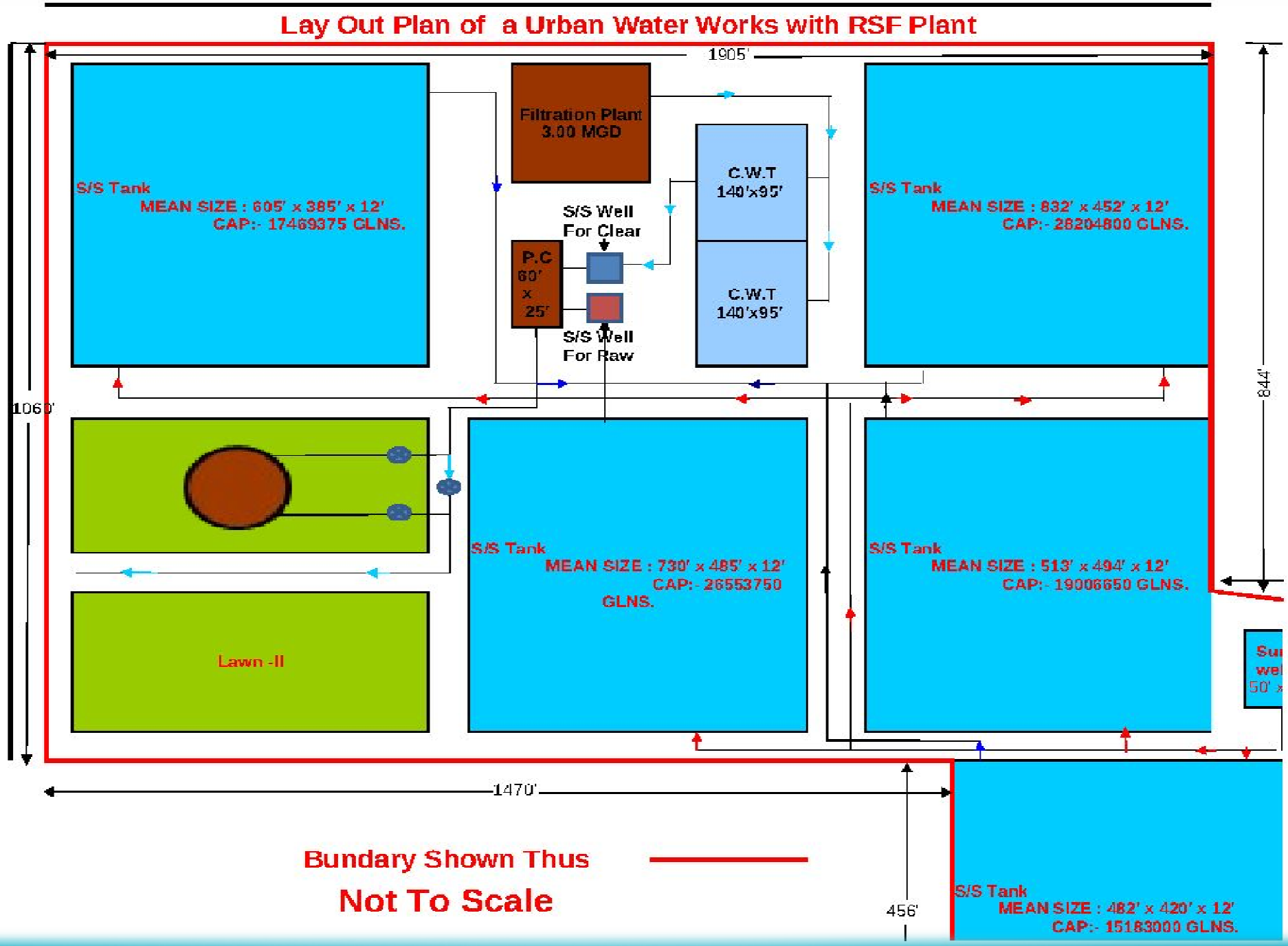
Lay Out Plan of a Urban Water Works with RSF Plant
1905'
1060'
844'
1470'
456'
S/S Tank
MEAN SIZE : 605' x 385' x 12'
CAP:- 17469375 GLNS.
Filtration Plant
3.00 MGD
C.W.T
140'x95'
C.W.T
140'x95'
S/S Well
For Clear
P.C
60'
x
25'
S/S Well
For Raw
S/S Tank
MEAN SIZE : 832' x 452' x 12'
CAP:- 28204800 GLNS.
Lawn -II
S/S Tank
MEAN SIZE : 730' x 485' x 12'
CAP:- 26553750
GLNS.
S/S Tank
MEAN SIZE : 513' x 494' x 12'
CAP:- 19006650 GLNS.
Bundary Shown Thus
Not To Scale
S/S Tank
MEAN SIZE : 482' x 420' x 12'
CAP:- 15183000 GLNS.

Purpose and functions of Various Components

Inlet Channel - To carry raw water from source to place of Water Works (storage space

) Storage and Sedimentation Tank – To store and allow plain sedimentation of bigger suspended material

i) High level Tank – To ensure continuous supply of raw water to filters during non su hours of power and also allow turbulence free smooth entry of water to slow sand filte

) Coagulation Sedimentation Plant – consists of feeding device, mixing tank, floccula basins and settling tanks – used for mixing coagulants and removal of suspended colle material by converting them in settleable flocks

) Filtering Units (Filter Beds) - To remove suspended , colloidal , bacterial impuriti mainly two types of filters are used for community plants – Slow Sand Filters and Rapi Sand filters.

vi) Clear Water Tank – To store filtered /clear water for supply to community .

vii) Suction and Scour Wells – To lower the suction of Raw water and clear wa pumping machinery

viii) Pump Chamber – To house various types of machinery and panel equipment. .

ix) Machinery – Two types machinery used Raw Water Sets and Clear Water Sets pump raw water and clear water respectively.

x) Over Head Service Reservoir – To act as balancing reservoir and also to sup in non supply hours of power .

xi) Distribution system – to provide safe drinking water to individual house hold

III- DESIGN AND PLANNING OF A WATER SUPPLY PROJECTS

While designing /Planning a water supply project , following points have to be ta

care of

1. **Area to be served**
2. **Present Population to be served**
3. **Design Period**
4. **Ultimate Population to be served**
5. **Per Capita Supply / Demand**
6. **Miscellaneous Demands**
7. **Nature and Location of facilities to be provided**
8. **Funds available**

1). Design Period for various components:-

i).	Head Works	15 years
ii).	Inlet Channel	30 years
iii).	Machinery	15 years
iv).	Distribution	30 Years
v).	OHSR	30 Years

2) . Population Forecast :-

	Period	Rural	Urban
i).	For 15 years	30%	50%
ii).	For 30 years	50%	80%

3) . Per Capita Demand :-

Sr. No.	Classification of towns / cities	Recommended Maximum Water supply levels (lpcd)
1	Towns provided with piped water supply but without sewerage system	70
2	Cities provided with piped water supply where sewerage system is existing / contemplated	135
3	Metropolitan and Mega cities provided with piped water supply where sewerage system is existing / contemplated	150

4). Miscellaneous Demands :-

a) Institutional

b) Industrial

c) Fire Fighting

3) . Design standards for various components:-

i) Inlet Channel :- To fill up S&S Tank in 7 days

Open Channel designed to maintain Minimum velocity of 1.0 ft / secon
(0.30 mtr / second)

RCC Pipe Channel designed to maintain Minimum velocity of 1.50 ft / se
(0.45 mtr / second)

ii) S/S Tank :- For 24 days storage plus 25% extra for evaporation losses and if connecte
with Main Branch designed only 3 days storage.

Normal depth 12'-0 (3.66 mtr) subject to condition of sub soil water depth

iii) High Level Tank :- Capacity ½ day supply.

iv) Coagulation Plant :-

a) Mixing Basin

Baffle Type – Vel.- 15-45 cm/sec
Detention Period – 20-50 minutes
Distance between channels- 45 cms
Depth of channel – not less than 0.9 m
Mechanically Agitated Mixer D.P.- ½ minute

a) Sedimentation Tank

also known as clarifier two types – Fill and Draw and another continuous flow type
Velocity – less than 30 cm/m
Detention Period – 4 to 8 hours
Surface loading – 14000-195000 ltrs/sqm/ day
Depth of flow- 3 to 6 m.

iv) Filter Beds :-

a) Slow sand filters :- designed at rate of filtration of 2 gallons / sft / hour or 50 gallons / sft / day or 100 ltrs / sqm / hour with 33% area extra.

b) Rapid sand filters :- designed with a rate of filtration of 2400 gallons / sft / day or 5 cum / sqm / hour or 5 m / hour filtration.

v)	**Clear Water Tank** :-		Capacity ½ day supply.
vi)	**Suction and Scour Well** :-	**Rural**	5’ dia circular
		Urban	8’ dia circular
vii)	**Pump Chamber** :-	To house the machinery , its size shall be sufficient	
viii)	**Machinery :-**		6 hours supply with equal capacity as stand bye.
ix)	**Distribution** :-	**i) Rising Main :-** 150% of Pumping capacity.	
		ii) Distribution :- for a capacity of 4 times Average Supply	
x)	**OHSR :-**		Capacity ½ day supply.
xi)	**Terminal head** :-	A terminal head of minimum 6.50 mtrs. or 20 feet in Rural a	
		35feet (10 mtrs) in urban scheme be maintained.	

The two important items involved in design of a canal based wate works are

1. Flow Diagram

2. Terminal Head Statement

Before we proceed to further finalize the various components , fir of all flow diagram is prepared which gives the hydraulic flow of water fro the Raw water source up to supply main

A typical flow diagram showing flow of water from one structure to anothe is shown here (On Next Slide)

A terminal head statement is prepared to design the distributio system and the net resultant head at each end /junction of net work worked out and it is kept in mind that no where at any end point / junctio the available head is more than minimum prescribed for particular scheme A typical terminal head statement is shown here with (on next slide)

FLOW DIAGRAM FOR A TYPICAL CANAL BASED WATER SUPPLY

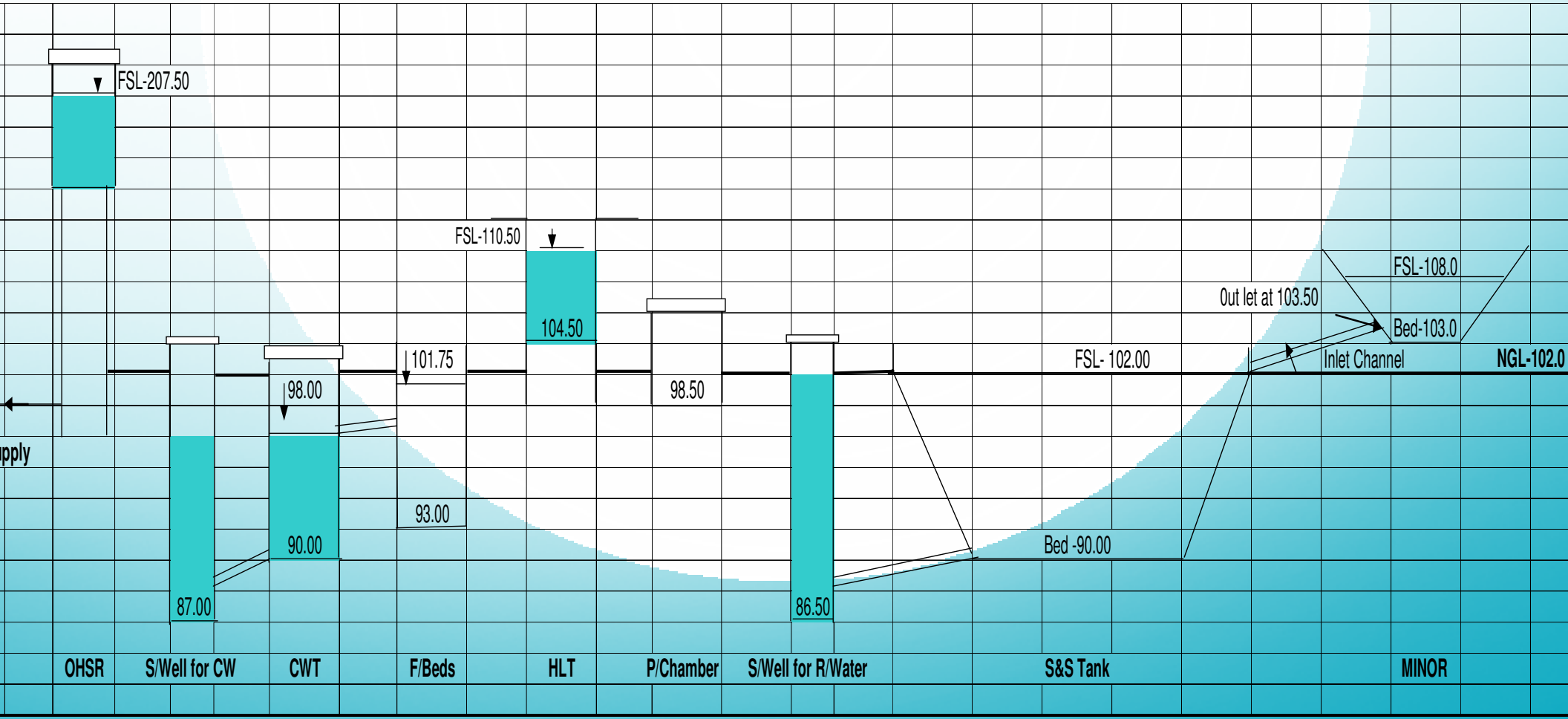

TERMINAL HEAD STATEMENT

Sr. No.	Name of Pipe	Prosp. Popu. To be served for next 30 Yrs. Over present population	Disch. In Gls. @ 70 Ltrs.per head per day @ 4 times	Size of Pipe (in inch)		Length of pipe line in feet	Loss of head in 1000 rft.	Total head Loss	Hydraulic Level		Ground Level	Terminal Head available	Remark
				Exist.	Prop.				U/End	L/End			

ABSTRACT				
Prop.Pipe			To be Dismantled	
Dia pipe	Length	S.V.	Dia pipe	Length

Slow sand Filters - Normally provide for Water Less than 20 NTU and where Land, labour, filtering sand easily available at low cost but chemicals, equipment's difficult to procure, skilled persons not available

D_{10} known as effective size varies from 0.25 – 0.35 mm

U_C Known as Uniformity Coefficient (Ratio of D_{60} and D_{10}) shall be 3 to 5

Scarping done for top 10-20mm bed when cleaning required

Thickness of Filter Sand shall not be less than 0.4 – 0.5 mtr.

(In Department we provide - 27" initially which shall not be less than 15" in any case)

Water Standing on Top of Sand known as - Supernatant water

Layer of Bacteria deposited at sand bed known as - Schmutzdecke layer or Zoogleal Mass

Process involves - straining, sedimentation, bio-chemical & biological process.

Schmutzdecke – slimy layer of biological organisms – feed on organic matter – converts it into simple harmless substances inert-suspended material –mechanically strained out in this layer thus water becomes free from suspended solids , colloids , pathogens & complex salts

Rate of Filtration - 0.1 m/hr. or 2gls/hour/sft or 50 gls /day /sft

Main Parts of Slow Sand Filters :-

1. Inlet Valve Control Chamber
1. Filter Sand
2. Supporting layers of Gravels
3. Cross Drains
4. Main Drain
5. Out Let Chambers to accommodate Rate of Filtration Control Valve

Operation – 1. Allow water from down side to come at least 10-15 cm above san bed – expulsing air entrapped in voids

2. Allow water from top side – Filtration starts – first few day filtrate to go waste –till bacterial layer is ripen , then once bacterial layer ripen start takin water in clear water tanks .

3. Maintain fixed head over sand bed by operating inlet valve an also rate of filtration constant by operating out let valve .

4. During operation, filter media gets starting clogged slowly an slowly with time and thus head loss increases.

5. When after opening outlet fully , the desired rate is not obtained filter is chocked now so stop feeding , put it for cleaning .

6. Draw water to a depth 10-15 cm below sand bed and then scra top 2 to 3 cm sand including dirty skin , take out scraped material out of bed again put filte to operation by repeating steps 1 to 5

7. Wash the scraped layer taken out of bed with raw water and afte next scrapping re-put the washed material in uniform layer over bed.

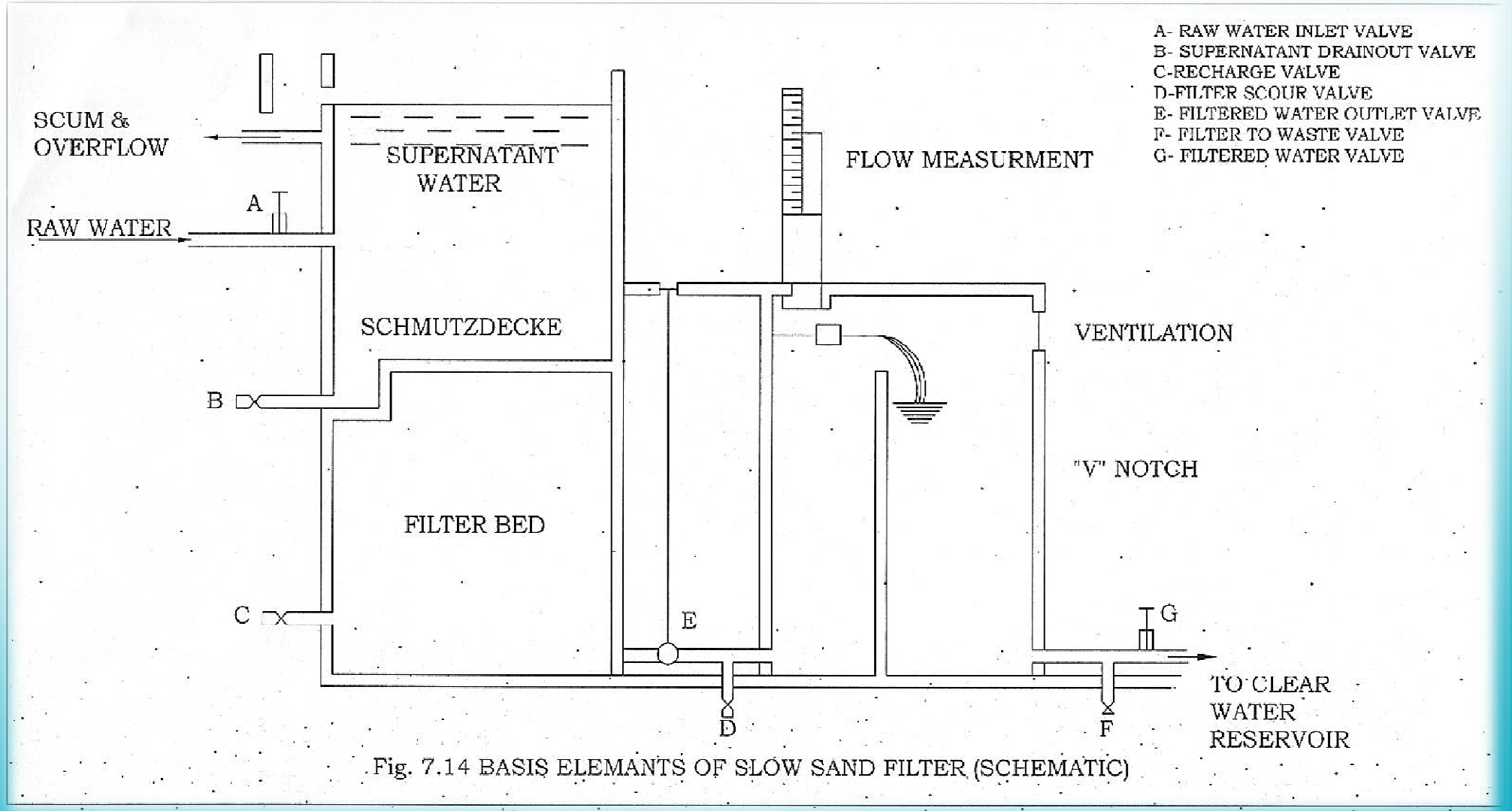

Fig. 7.14 BASIS ELEMANTS OF SLOW SAND FILTER (SCHEMATIC)

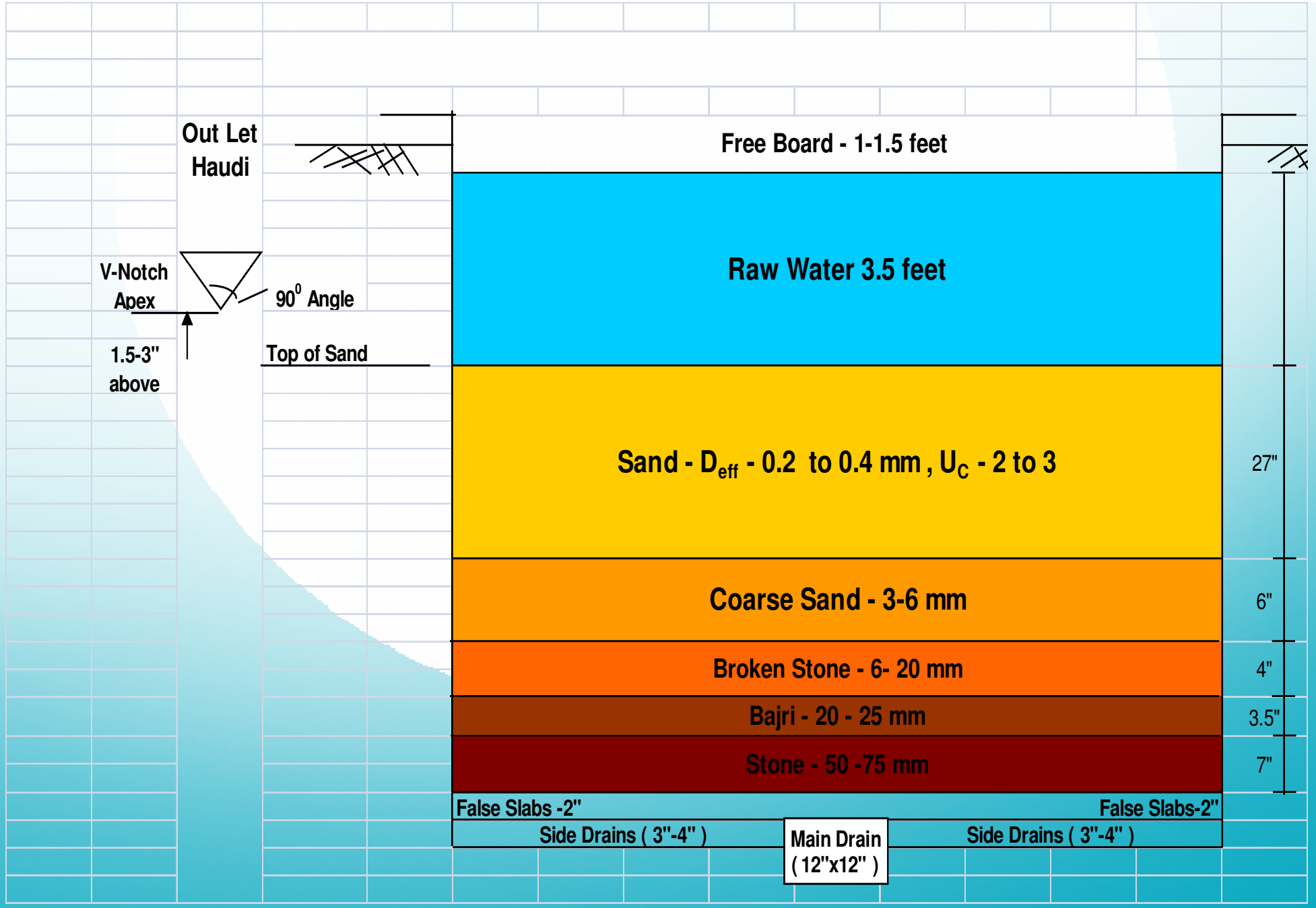
Out Let
Haudi
Free Board - 1-1.5 feet
V-Notch
Apex
90⁰ Angle
1.5-3"
above
Top of Sand
Raw Water 3.5 feet
Sand - Deff - 0.2 to 0.4 mm , UC - 2 to 3
27"
Coarse Sand - 3-6 mm
6"
Broken Stone - 6- 20 mm
4"
Bajri - 20 - 25 mm
3.5"
Stone - 50 -75 mm
7"
False Slabs -2"
False Slabs-2"
Side Drains (3"-4")
Main Drain
(12"x12")
Side Drains (3"-4")

Special Points to take care during construction and Maintenance. :-

1. There shall be no turbulence in the incoming water over sand bed so th bacterial layer (Schmutzedecke) ripping over sand bed may not be disturbed for this
   a) A High Level Tank may be provided prior to Filter Beds to provide smooth entry of water into filters .
   b) A large size slab under inlet pipe to reduce velocity of incoming water almost zero.
2. Coagulated water shall not be applied directly over the filter bed otherwise flocks would close the pores of sand resulting in choking of filter.
3. Never allow filter to "**Dry**" so for this scrapping be done in wet conditions a put the filter in use immediately after scrapping.
4. Vents pipe provided in walls must be up to cross drains bed.

5. A 90^0 V-Notch with permanent demarcation to indicate the level of filter water must be constructed.
6. Apex of V-Notch must be 2-3" above top of sand bed .
7. Glazed tiles preferably sky blue colour be provided in out let haudi.
8. All manhole / opening covers be provided double seal and not single seal.
9. For circular filters – Inlet and Outlet haudies be provided separating out fr periphery of filter.
10. Demarcation for Top of filter sand, all supporting layers and top of supernata water be permanently marked on walls .
11. All pipes be embedded simultaneously during construction and no openings (Khurras) be left in walls .

12. Filter media washing plate form be got constructed at the time of constructio of scheme and media taken out shall be washed regularly.

13. In case of brick structure CC Coping provided in the last with expansion join in full thickness, a continuous vertical DPC on outer face without any breakag / crack shall be provided.

14. Cowls be provided on all vents.

15. Filters shall be provided service keys for sluice valves permanently and n opening shall be left from where foreign material can enter.

16. Thickness of scraping shall not be more than 3 cms and no deep penetration shuffling of top layer be allowed in any case.

MIXING BASINS-

- Tanks in which water and coagulants are mixed- called mixing basins Usually 2 types-
- (i) Baffle wall type -
- (ii) Mechanically agitated
- **(i) Baffle types-** a) round the end-
- b) over and under baffles-
- a) **Round the end-**
- Tank is divided into continuous series of channels by means of baffles which cause water to which chemical added- to flow around the ends through no. of channels. Channel are designed so narrow that velocity does not allow deposits.
- b) **Over and under Baffles-**
- Tanks provided with vertical battle- chemical mixed water trends over and under the battles through the channels.

- Contd.

- Normally- velocity kept is 15 to 45 cm/ sec with detention period 20-50 minutes.
- Channels 45 cm wide if closer difficult to clean.
- Depth in case of a)- not less than 0.9 Mtr.
- In case of a)- Depth & in case of b) width
- Depth/ Width = $\frac{\text{x- area of each channel}}{\text{Distance between baffles.}}$

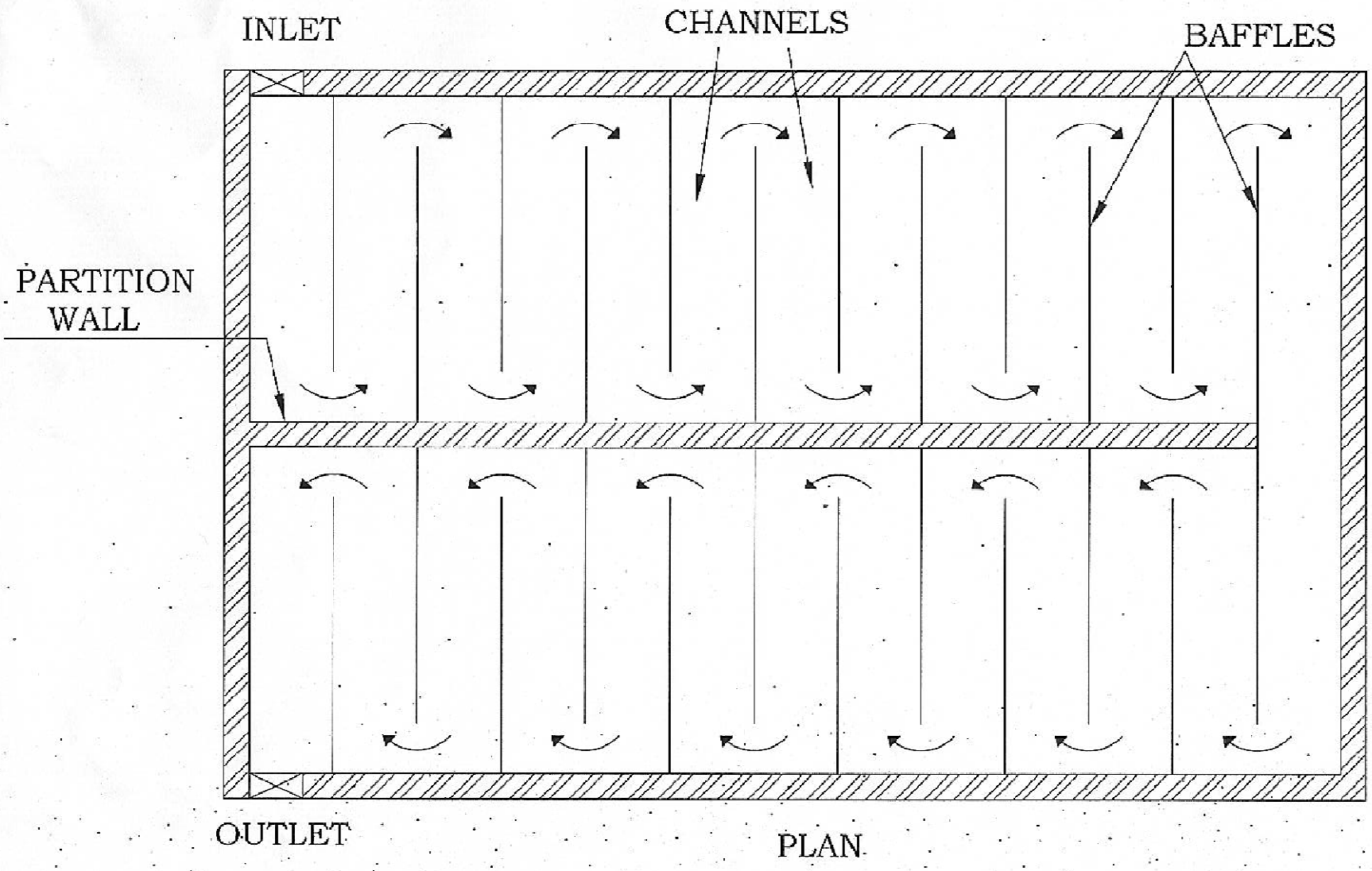

Fig. 7.3 MIXING BASIN WITH ROUND THE END BAFFLES

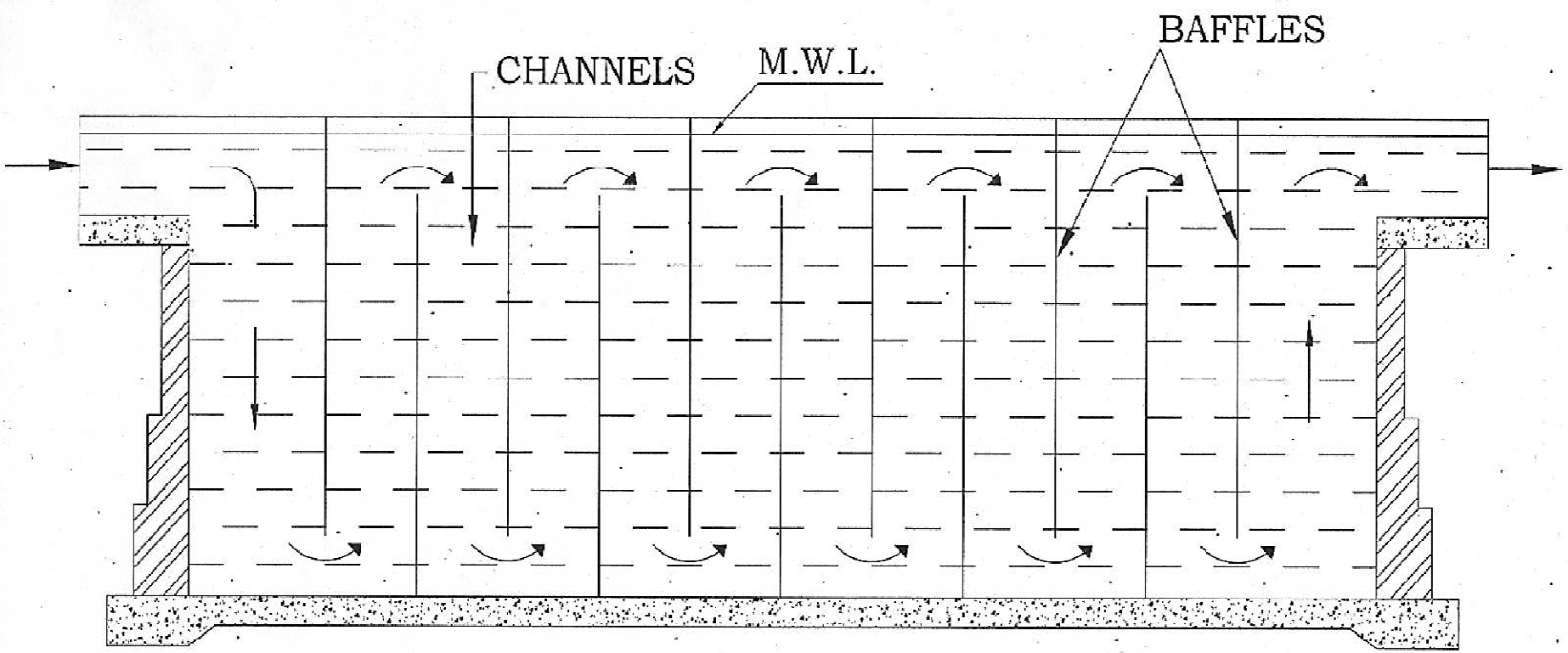

Fig. 7.4 MIXING BASIN WITH OVER END UNDER BAFFLES

MECHANICALLY AGITATED BASINS-

For bigger plants- water is subjected to violent agitation at first and then gentle action when floc is forming. First action achieved in flash mixer and 2nd in flocculator-

- **Flash mixer**- rapid mixing in rectangular chamber- by a propeller driven by electric motor Detention period ½ minute [less than 1-0 minute].
- **Flocculator**- slow stirring in a circular tank equipped with paddies revolving on a vertical shaft- operating at 2-3 rpm, time allowed in 30-60 minutes.
- Practically- chemical feed, flash mixer, flocculator & clarifier are combined and commonly used as one limit.

CLARIFIER- Small scrapers are attached to redial arms moving towards a sludge sump from where sludge can be continuously removed.

- **Advantage of mechanical over Baffle Wall**
- i) Quantity of coagulant- small- [Say about 40%]
- ii) Negligible Head loss
- iii) Greater flexibility of operation
- iv) Lesser cost of installation.

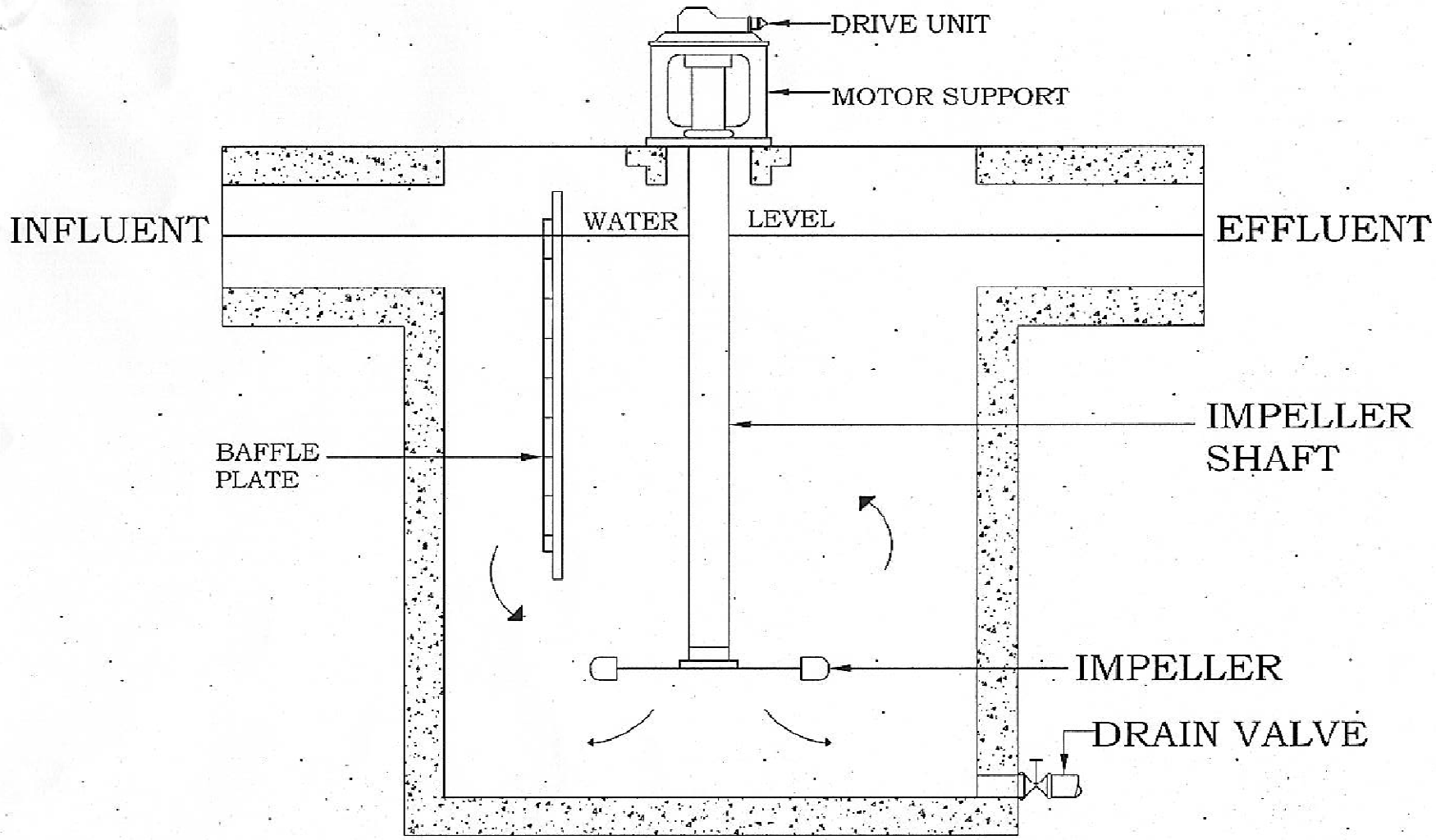

Fig. 7.5 Flash Mixer

- **SEDIMENTATION TANKS OR CLARIFIERS ARE OF TWO TYPES-**

  I) fill & draw ii) continuous flow

  these days only 2nd types are provided

- These may be further of 2 types-
- i) Plain sedimentation
- ii) Chemically aided
- May further be of two types-
- i) Without mechanical equipment which are cleaned manually after drawing clear water- generally Rectangular
- ii) Mechanically cleaned- Cleaned by scrapers by moving sediment into hopper placed near the inlet to the tanks from which sedimentation removed by pumps- generally- circular- water enter from bottom- in flow up ward direction towards peripheral weir- flow into effluent channel & than into effluent pipe- **"Dorr-Clarifier"** one of commonly used-

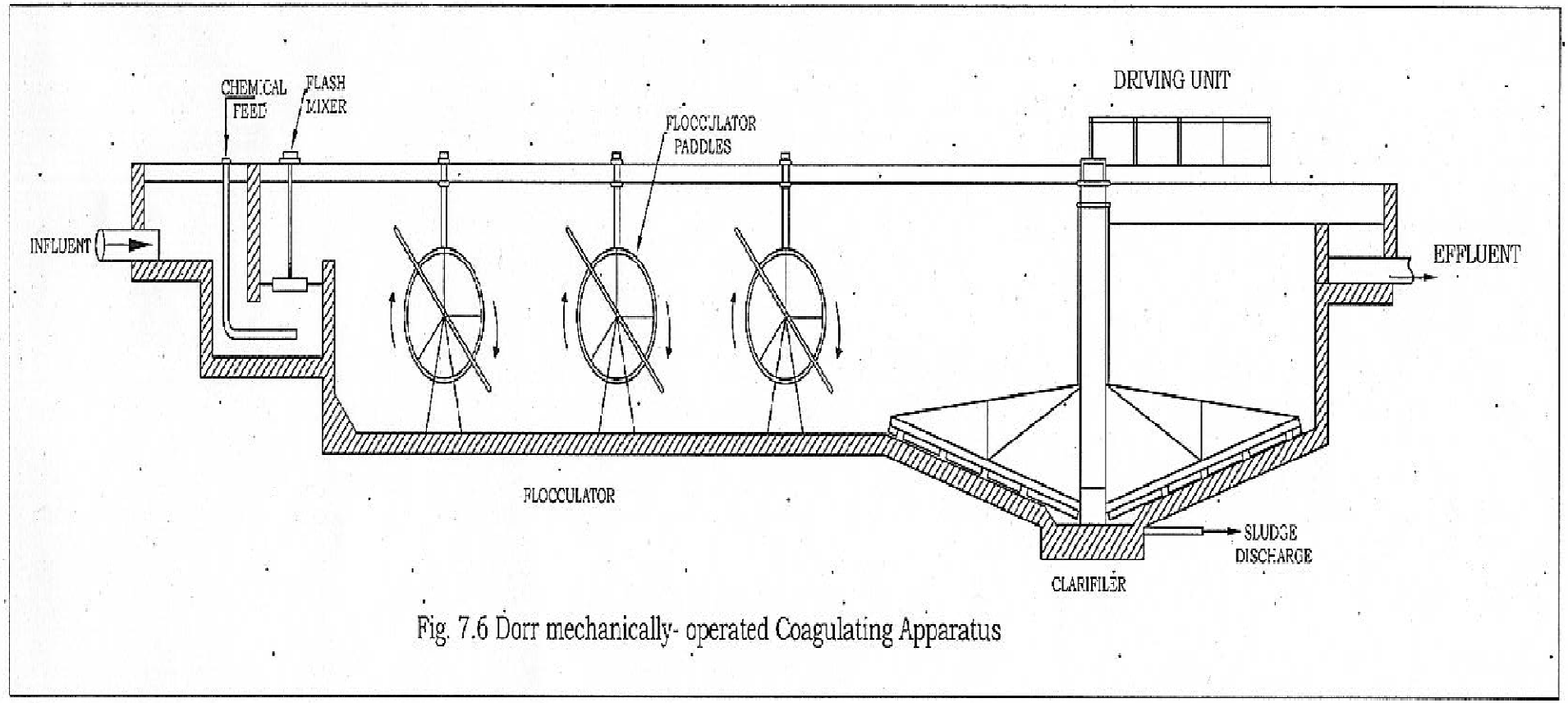

Fig. 7.6 Dorr mechanically- operated Coagulating Apparatus

- ADVANTAGE OF MECHANICAL OPERATED CLARIFIER OVER MANUAL -

I) Better efficiency
ii) more economical
iii) better flocs removal

- for design velocity of flow be kept 30 cm/m
- Detention period- 4 -8 Hrs. for plain
- & 2 -4 Hrs. for chemically aided
- Surface loadings- 14000- 125000 liters/ sq mt / day for granular Solids. and
- flocculants material 50000- 60000 liters/ m^2/ day
- Depth of flow ranges 3-6 mt Dia not exceeding 60 mt.

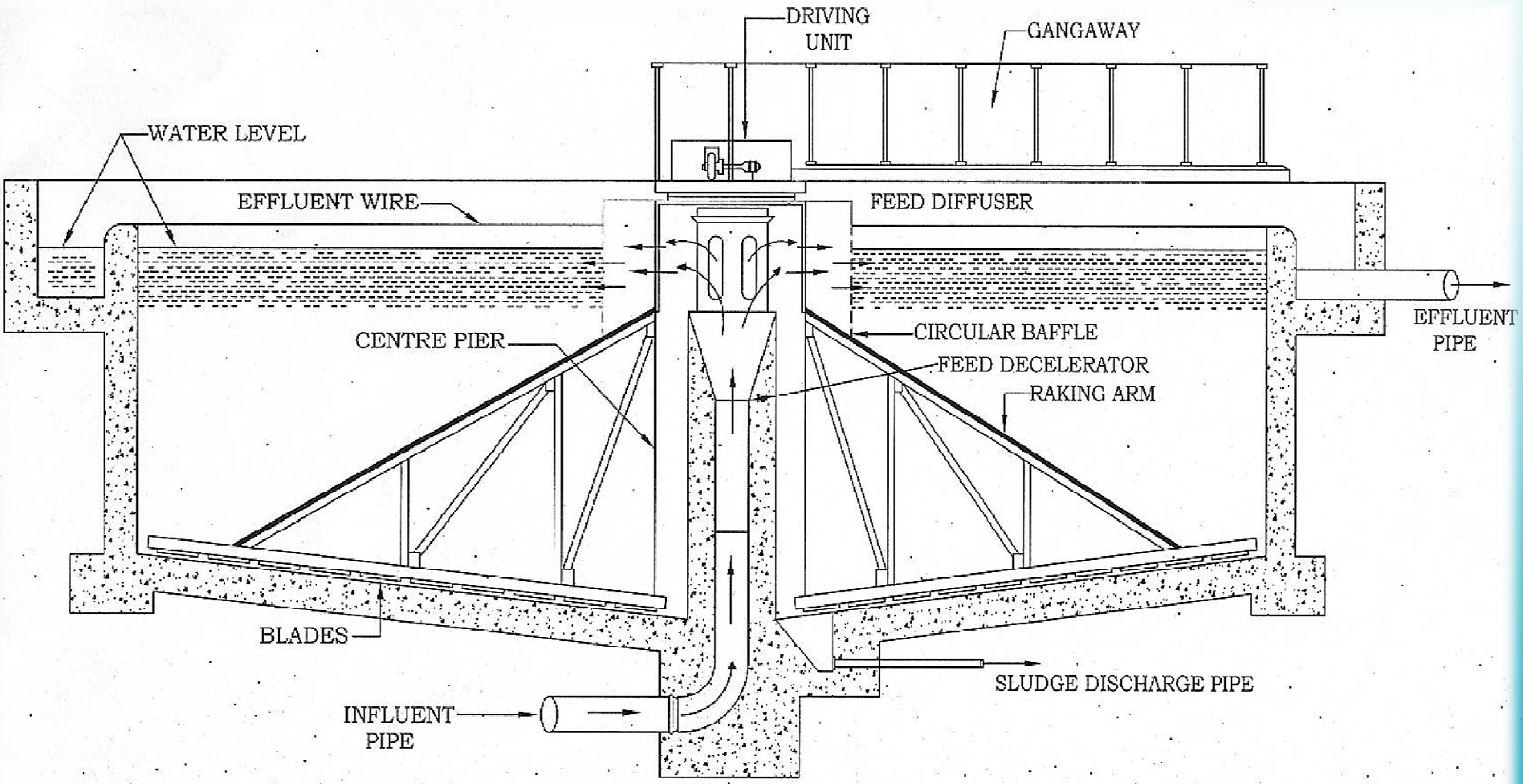

Fig. 7.7 Dorr Clarifier

Rapid sand filter –

Rapid sand filter comprises of a bed of sand serving as a single medium granular matrix supported on gravel overlying an underdrainage system, its distinctive feature include careful pretreatment of raw water to effectively flocculate the colloidal particles, use of higher filtration rate and course but more uniform filter media to utilize greater depth of filter media to trap influent solids without excessive head loss.

Basic action comprises of depth filtration – several mechanisms act simultaneously singly or in combination in two distinct steps – transport and attachment.

Transport - Impurity particle brought from bulk of liquid within the pores close to the surface of medium or the previously deposited solids on medium. Once particles come closer – Attachment to retain it on surface.

Transport step involves straining, gravity settling , impaction , interception, hydrodynamics & diffusion - basically physical process

Attachment accomplished by physicochemical process – involving electrostatic interaction, Vender wall's forces of molecular attraction, chemical bridging or specific adsorption.

Rate of filtration – 4.8 m / hrs. or 80 – 100 lpm / m^2

For a single unit maximum area may be 100 m^2 for plants of cap more than 100 mld consisting of two halves each of 50m^2

L : B Ratio may be kept – 1.11 to 1.66 (More generally 1.25 to 1.33)

Minimum depth - 2.6 mtr including free board of 0.5 mtr.

Effective size of sand Used D_{10} – 0.45 – 0.70 mm with U_C 1.3 to 1.7

- Other properties of media sand

Ignition Loss	≯	0.7% by weight
Solubility in HCL	≯	5% by weight
Silica content	≮	90%
Sp. Gr.		2.55 to 2.65
Wearing loss	≯	3%
Depth of sand		0.6 – 0.75 mtr.

Cleaned by back washing.

Rate of backwash much more than filtration so this is governing for design.

Most common under drain system is central manifold with laterals either perforate at bottom or having umbrella type strainers on top.

Or wheeler bottom - a false bottom with strainers spaced for entire area at regul intervals Or a porous plate floor situated on concrete pillars.

Perforations 5 to 12mm dia spaced at 80mm to 200m

Ratio of total area of perforation / total x- area of laterals 0.25 to 0.5 (for 5 mm – 1 mm perforations)

Ratio of total area of perforation to total filter area 0.3%

Length to dia of lateral ≯ 60 Spacing of laterals – 300mm

X-area of manifold 1.5 – 2.0 times total area of laterals.

Gravel between sand & under drainage system for purpose

i) to prevent sand entering under drainage

ii) to aid uniform distribution of wash water.

Size 50mm at bottom to 2-5mm at top with total depth of 0.45m Classified into 4 or more sizes grades

Main Parts of Rapid Sand Filter :-

1. Filter tank
2. Filter Media
3. Gravel Support
4. Under Drain System
5. Wash Water Troughs
6. Appurtenances - Include manually, hydraulically or electrically operate sluice valves on the influent, effluent, drain, wash water lines measuring device such as ventury meters, rate controllers activated by measuring devices, loss o head & rate of flow gauge, sand expansion indicators wash water controllers indicators, operating tables & water sampling devices and ejectors & sand washer wash water tanks & pumps

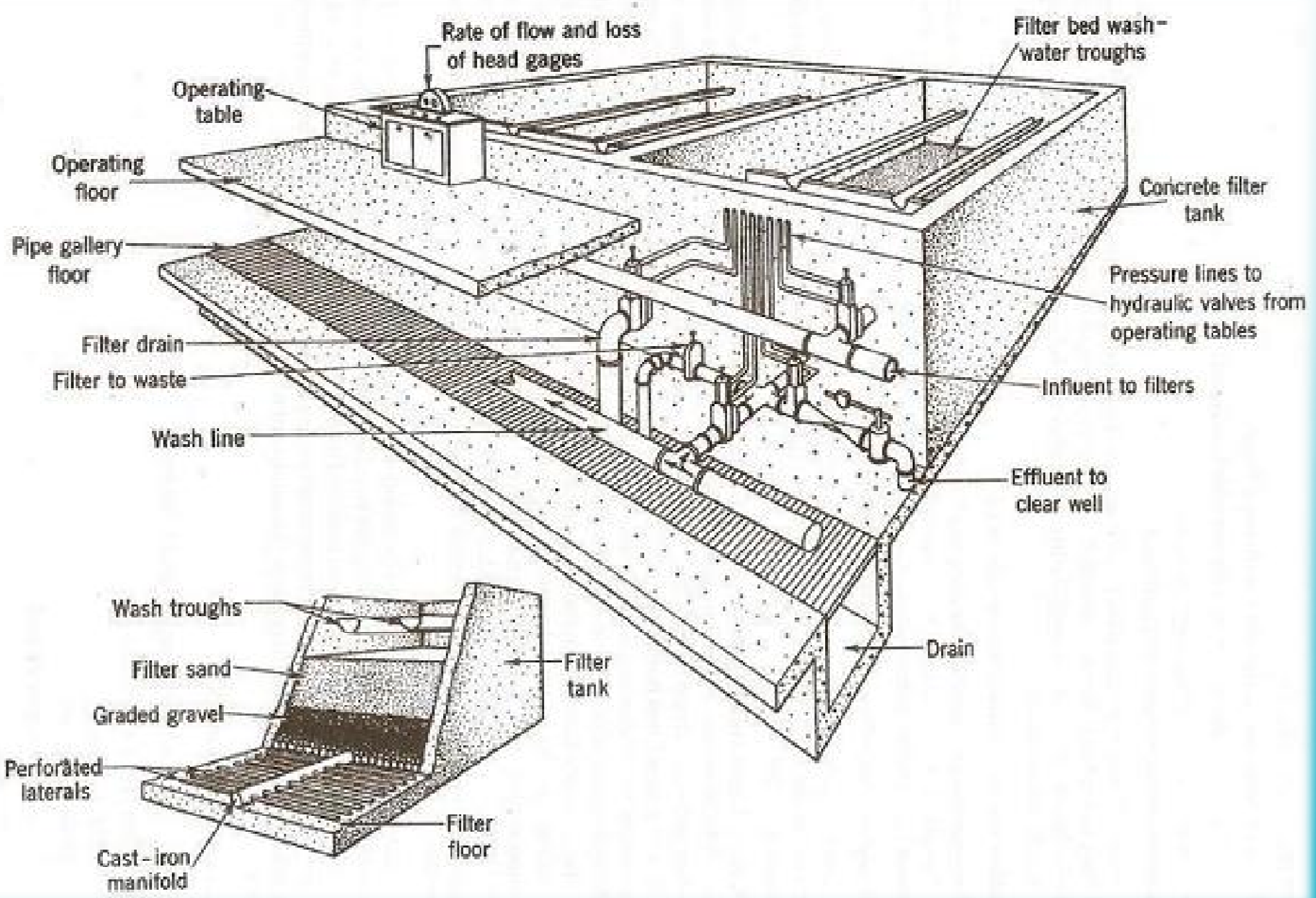
Rate of flow and loss of head gages
Filter bed wash-water troughs
Operating table
Operating floor
Concrete filter tank
Pipe gallery floor
Pressure lines to hydraulic valves from operating tables
Filter drain
Filter to waste
Influent to filters
Wash line
Effluent to clear well
Drain
Wash troughs
Filter sand
Filter tank
Graded gravel
Perforated laterals
Filter floor
Cast-iron manifold

Operation – 1. Water from bottom side is entered to expel air from voids .

2. Water from Coagulation settling tanks is admitted into filter units through valves. Distributed by troughs which remain submerged while working over the entire bed area.

3. Water starts filtering becoming free of suspended , colloidal and bacterial impurities. Collected by under-drain system and taken into clear water reservoir

4. As filtration continues , filter media goes on getting clogged with arrested impurities and thus head loss increases. Initial head loss is 15 to 25 cms and maximum allowed is 2 to 2.5 mtrs. So when this head loss is achieved , the filtration is stopped and unit put to cleaning.

5. Washing operation is followed as –

a. Influent valve (A) closed

b. Filtering continues till water stands 15 -20 cms from the sand surface , the effluent valve is closed (D)

c. Waste water valve (B) is opened

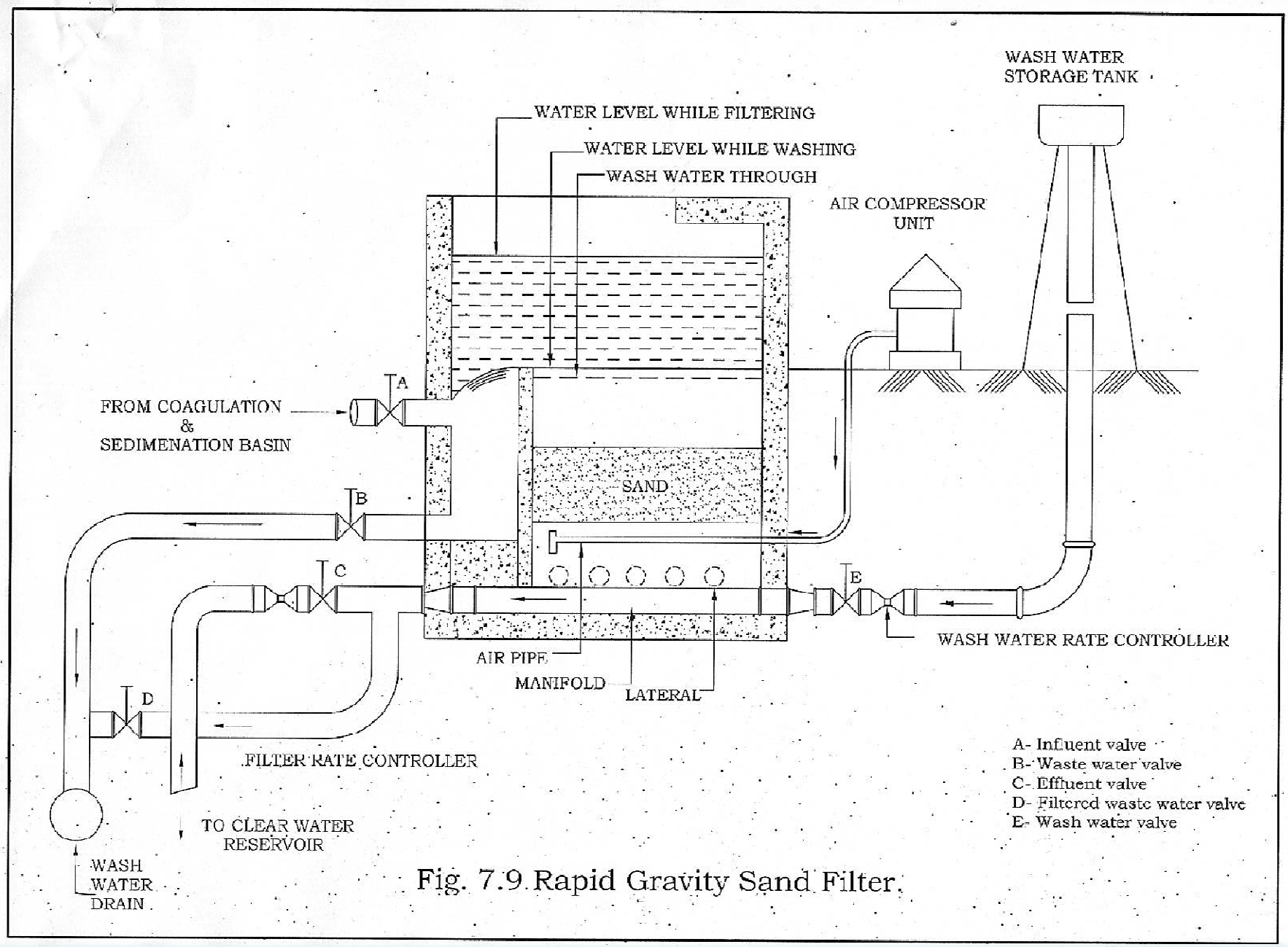

Fig. 7.9 Rapid Gravity Sand Filter.

d. Wash water valve (C) is gradually opened. The wash water rises through laterals , strainers , gravel and the sand .It expands the sand bed and carries away with it the arrested impurities ,leaving behind washed clean sand .It is then collected by the distribution troughs and passed out through the waste valve . Washing is continued till washed water appears fairly clear.

e. Wash water valve (C) is closed .

f. Waste water valve (B) is closed .

g. Valve (E) is then opened which allows filter water to waste

h. After 2 minutes when sand settles down valve (A) is opened, influent allowed and the filtrate for some time wasted through valve (E)

i. Valve (D) is opened and (E) is closed and normal working is resumed

High Rate Back Wash :-

Back wash should be arranged at such a pressure that sand should expand to almost 130-150% of its undisturbed volume . The pressure at which water is applied is about 5mtr. head of water as measured in underdrains at a rate of 36m/ hr (600 lpm/m^2) for 10 minutes when no other agitation is applied .For high rate water should be applied at 6-8 m head at a rate of 40-50 m/hr for 6-10 minutes.

Air Wash -At certain plants compressed air is used to agitate the sand for about 5 minutes just before the wash water is applied .This cuts down quantity of wash water , but process becomes complicated . Compressed air is used through under drains – 36 to 45 m/ hr (600-900 lpm / m^2) @ 0.35 kg / cm2) pressure – 5 minutes before water wash

Surface Wash – Upper layer of filter bed become dirtiest and any inadequate washing will lead to formation of mud balls , cracks and clogged spots in filters . So at some plants adequate surface wash is applied to supplement the conventional back washing in which clean filtered water is applied from above by means of nozzles of special design . This keeps the filter bed in good shape and prevents formation of mud balls. Commonly used methods are -

a) fixed type surface wash system 25mm pipe @ 0.6 to 0.9 mtr, lower end a 0.1 mt approx. over sand surface – Nozzle on lower ends of pipes.

b) Rotary type – rotating units at 50 to 75mm over bed, jet nozzles on side & bottom of arms , jet action of water causes arms to rotate at 7 – 10 rpm

Some Common Operational Problems :-

Improper operation of filter can result in poor quality of finished water and damage to filter. So for proper operation constant monitoring of filtered water turbidity and head loss is necessary. Similarly improper back wash may also cause inadequate filter cleaning and possible damage to filter bed. Two most common problems encountered in filter operation are mud ball formation and air binding . Mud ball because of improper back washing .Once mud ball formation takes place , entire media has to be taken out washed and re-put to use the same . Air binding usually caused by improper hydraulic design .Remedial measures are i) replacing entire media with different gradation ii) Reduce the maximum flow rate iii) inducing additional hydraulic head in the filter effluent to raise hydraulic gradient in filter bed.

Rapid Sand Filters Versus Slow Sand Filters

Sr. No.	Item	Slow Sand Filter	Rapid Sand Filter
1	Land Required	Larger Area Required	Relatively small Land required
2	Rate of Filter	Lesser	Much Higher
3	Pre-treatment	Not suggested	Essential
4	F.Media	Large quantity required Fine sand with D_{10} – 0.25 to 0.35mm, U_C = 3 – 5	Smaller quantity required Coarse sand with D_{10} = 0.45 to 0.70mm, U_C = 1.3 to 1.7
5	Initial Turbidity	less than 20 NTU	No limit
6	Washing time	Longer time required	Very few minutes
7	Staff	No much skilled labour required	Skilled Labour required
8	Taste & Odour	Effective	Not much effective
9	Chemicals	Not required	For treatment of R/Water Required

10	**Mtc. Cost**	**Lesser**	**Quite High**
11	Capital Cost	Lesser	High
12	Frequency of Cleaning	Once after month or two	Frequent in 24-72 hours
13	Energy Consumption	Almost Nil	High Energy consumption
14	Sludge	Small Volume	Large sludge
15	Efficiency	98-99%	Up to 95%
16	Back wash water & Sludge	No requirement	Treatment , sewage system or stabilization pond required .
17	Effectiveness	Can remove smallest pathogens	Pathogens smaller than 20µm not removed
18	Depreciation of Plant	Lower	Higher

Over Head Service Reservoir

For filling OHSR valve (A) and (B) are kept open , Valve (C) and (D) are kep closed

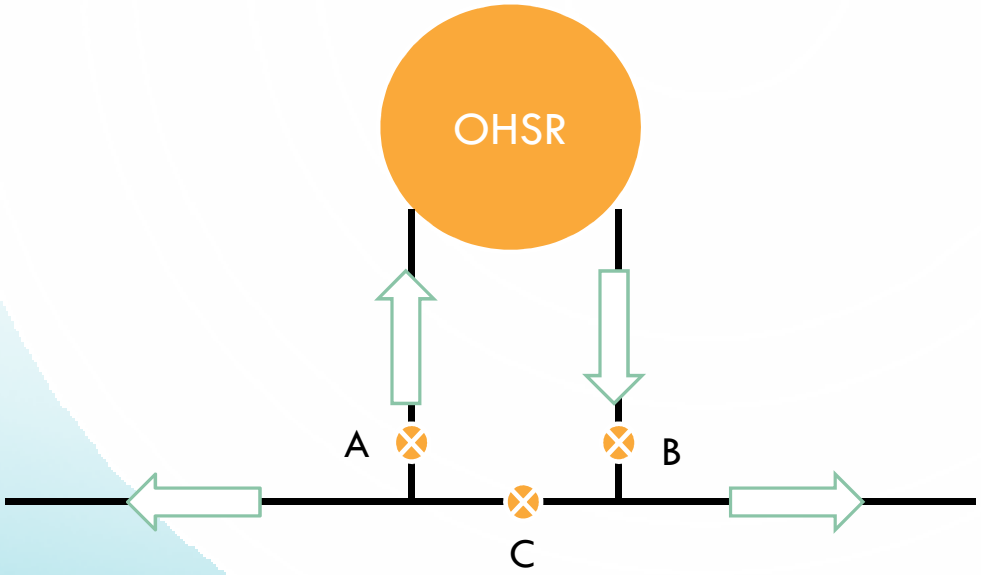

During supply time – All four valves are kept open – in case demand is not met with pump discharge then OHSR supplement the supply releasing water in mains and in case pump discharge is more than demand, the surplus water is raised to OHSR

Water Distribution Systems

The purpose of distribution system is to deliver water to consumer with appropriate quality, quantity and pressure. Distribution system is used to describe collectively the facilities used to supply water from its source to the point of usage.

Requirements of Good Distribution System

1. Water quality should not get deteriorated in the distribution pipes.
2. It should be capable of supplying water at all the intended places with sufficient pressure head.
3. It should be capable of supplying the requisite amount of water during firefighting.
4. The layout should be such that no consumer would be without water supply, during the repair of any section of the system.
5. All the distribution pipes should be preferably laid one meter away or above the sewer lines.
6 It should be fairly water-tight as to keep losses due to leakage to the minimum.

ECONOMIC DESIGN OF CONVEYING MAIN

he most economical size for conveyance main will be based on a proper analysis of the following factors:-

The different pipe sizes against different hydraulic slopes which can be considered for the quantity t conveyed.

The different pipe materials which can be used for the purpose and their relative costs as laid in position.

The duty, capacity and installed cost of the pump sets required against the corresponding sizes of the pip under consideration.

The recurring costs on:-

a) Energy charges for running the pumping sets,

b) Staff for operation of the pump sets,

) Cost of repair and renewals of the pump sets,

d) Cost of miscellaneous consumable stores, and

e) Cost of replacement of the pumpsets installed to meet the immediate requirements, by new sets a intermediate stage of design period. The full design period or the repayment period may be 30 years or while the pumpsets are designed to serve a period of 15 years.

Some General Points to be cared in Construction of Various Structures

1. **Inlet Channel**

i) Inlet Channel before entering into S/S Tank preferably be provided with a depressed bed (silt catcher) and grating of vertical bars.

ii) Channel longer than 1 km be provided with silt catcher at every km in addition to starting and end point.

ii) Levels of inlet channel must be cared and at least SDE or J.E himself should satisfy about these levels.

2. Storage and Sedimentation Tank

i) Plinths be given steep out ward slope so as to protect the structure from water penetrating along parapet / slopes.

ii) S/S must have gauge cast in plaster itself along the main stair.

iii) Floating arm must be installed or even on new tanks, well-intake system can be tried.

iv) Stair case preferably on all sides of S/S Tanks for large tanks or at least 2 sides be constructed so as to provide stability to the side slopes of the tank.

v) Grating (Jali) must be provided at inlet of S/S Tank.

vi) Parapet topping be laid in panels of 3-4 feet (1m) length with expansion joint through out thickness of topping.

3. **H.L. Tanks**

i) Provision for aeration must be made.

ii) Near scour provide at least 1-2” deep small haudi and proper slope towards the scour pipe so as to drain off the same completely.

5. **Clear Water Tank.**

i) Opening in Clear Water Tank, Filter Haudies must be properly plastered/ finished.

ii) On top slab 6”-9” earth cushion must be provided. Vent must be provided in roof slab.

iii) Underside / Ceiling of top slab of clear water tank must be plastered.

6. **General**

i) Chlorination Haudi of proper design and filter media washing plate form must be prov initially with original work.

ii) Provision for charging must be done for Raw Water and Clear Water Sets either connec their suction inside pump chamber with G.I Pipes or by putting one storage tank of 500 ltr. capacity on roof of Pump Chamber.

iii) No plantation at least within 25-30 feet reach of any structure.

iv) Single phase sets can be installed for Raw Water so as to overcome the shortage of pow

v) Compact type panel board with inbuilt ELCB, MCB, Capacitor and protection relay et installed on new schemes.

vi) Automation of single village tube well based schemes shall be done keeping in view shortage of staff.

vii) Automatic mechanical dozer using liquid chlorine (Hypo. Sol) or Twin Oxide be prefer

viii) Sign board be constructed on boundary wall itself.

ix) Bearing plaster on brick work must be provided to place the RCC slab on brick work.

x) In beams – no shear stirrups be provided over supports.

xi) Practice of using Brick ballast in cement concrete be stopped not to be used.

xii) Proper overlap in steel be provided – minimum 48 times dia of steel.

xiii) Pipe line at Head Works – particularly running at gravity be carefully laid in the str supervision of J.E.

xiv) Expansion joints be provided in boundary wall up to DPC levels.

xv) DPC should be continuous wherever provided and no break or gap should be allowe

xvi) Proper earthing be got done for electric sets in the beginning itself.

xvii) Suction and delivery pipes for pumps be provided after working out their sizes as p design calculations.

xviii) Separate suction be provided for stand-bye sets.

xix) Double Seal M.H Covers be used instead of single seal.

xx) Air valve must be installed on delivery pipe to allow the air to escape.

6	**Laying of Water Supply Pipe Lines**	
1.	Depth of Excavation	– Minimum Cover about 1 m over pipe .
2.	Width of Excavation	- Minimum 60 cm at bed for pipes larger than 80 m (3”) dia
3.	Straightness of Excavation	- In straight reaches , no deviation be permitted .
4.	Preparation of Bed	- Check that the bed of excavated trench is horizon or in slope no undulation be allowed .
5.	Jointing of pipes	- The joints be got checked .
6.	Pipe and its Material	- The pipe shall be as per prescription and ends of pipes be checked that they are not broken or damaged .
7.	Joints and their material	- Joints shall be as per description , damaged joints broken joints shall not be permitted .
8.	Handling of excavated earth	- Excavated earth shall be handled properly , it shall cause inconvenience to people or obstruction to traffic
9.	Refilling of trench	- After laying of pipe trench shall be refilled in layer and surplus earth shall not be allowed to be lifted or disposed off
10.	DI / CI S&S Pipes	- If socket pipes are used check that the sockets are upstream side

Check List
for
Maintenance of Various Structures of Canal Based Water Sup

Prime requirements for successful running of a canal based scheme are

Canal Raw Water Must reach Water Works

Filters are working – Water proper filtered

Chlorination is done , disinfection must be done properly

No leakage in distribution system.

a) Check for any leakage / pilferage of water .

b) Check for pollution of water by any means such as bathing of people or the cattle , washing utensils , clothes , vehicles , inflow of waste water fro sanitary drains.

c) Check for any blockage which may be artificial, silting up , weed growth etc. etc.

2.

a) Check that Floating arm is in working condition.

b) Check for any floating material , if present be got removed .

c) Check for any weed growth on plinths , lining .

d) Periodically check for silt in tank , if capacity reduced to significant level say reduced by more than 25% , de-silting be carried out preferably in winter season .

e) Check that no fishing, boating is done in S/S tanks.

3 Slow Sand

a) Check that rate of filtration is not more than prescribed .

b) Check that no unit be allowed to dry up when not in use.

c) Check that scraping is done when the sand is wet and only for a depth ½" to ¾" of top layer.

d) Check the depth of water over sand bed is in no case more than 3½'.

Filter dia in feet	V-Notch Head		Filter Area in Sft.	V-Notch Head	
	In Cms.	In Inches		In Cms.	In Inches
14'	3.86	1.52	1000	8.03	3.16
15	4.00	1.60	1200	8.72	3.43
16	4.20	1.65	1250	8.79	3.46
17	4.52	1.78	1400	9.20	3.62
18	4.62	1.82	1500	9.42	3.71
19	4.75	1.87	1600	9.68	3.81
20	5.00	2.00	1800	10.16	4.00
21	5.10	2.02	2000	10.64	4.19
22	5.23	2.06	2200	11.02	4.34
23	5.48	2.16	2400	11.38	4.80
24	5.82	2.29	2500	11.57	4.55
25	6.00	2.37	2700	11.91	4.69

26	6.06	2.40	3000	12.43	4.89
27	6.15	2.42	3200	12.59	4.96
27.5	6.25	2.46	3400	12.78	5.03
28	6.35	2.50	3500	12.93	5.09
30	6.9.	2.76	3600	13.08	5.15
31	7.30	2.87	4000	13.70	5.39
32	7.35	2.89	4500	14.32	5.64
33	7.54	2.97	4700	14.57	5.74
34	7.75	3.05	5000	14.96	5.89
35	7.95	3.13	5500	15.53	6.11
36	8.13	3.20	6000	16.08	6.33
37	8.26	3.25	6200	16.29	6.42
38	8.59	3.38	6500	16.62	6.54
40'	8.84	3.48	7000	17.02	6.70

4.

a) Check that Level indicators are working and giving proper reading .
b) Check for any leakage from the roof or container of OHSR .
c) Check that ventilators are in working condition .
d) Time to time check for silting in CWT and OHSR .
e) Check that all openings are tightly closed so as to avoid entry of Sunlight foreign material , mosquitoes or insects.
f) Overflowing be checked .

5 **Floccula**

a) Check for the speed of flocculator so that proper flocks may grow and also s building up is avoided .
b) Check that the moving parts are painted with anti corrosive paint and lubricated .
d) Check that sufficient spares are available in stock for emergency use.
e) Check that Jar Test performed daily when significant raw water quality changes are expected
f) Monthly calibration of chemical feeders done .

6

a) Check that painting and overhauling of the unit be done a month or two before the monsoon.

b) Check that the unit is working continuously .

c) Check that outlet weirs are clean .

d) Check if launders are clean ,if not , same be got cleaned with wire-brush and washed with bleaching powder solution to control growth of algae etc.

e) Check that the sludge line is free of choking's.

f) Check the traction wheels for alignment.

g) Check that there is minimum of turbulence at the inlet of clarifier .

h) Check that the effluent is removed from tank with minimum disturbance .

7

a) Check that all gauges like flow measuring and loss of head measuring are i working order.

b) Check for rate of filtration

c) Check for depth of sand bed from time to time and if it is depleted by more than 1 cm it should be replenished

d) Check that water level does not go below the sand surface

e) Check that backwash is done for a sufficient time say 3 minutes which will avoi mud ball formation.

f) Check that waste water drain is free of clogging .

g) Check that sand is not carried away during back wash.

h) Check if head loss is between 1.8-2 meters , filter may be put to back wash.

i) Check the turbidity of standing water on the bed at the close of wash which shoul not be more than 10 JTU .

8

a) Check that chlorinators are in working order .

b) Check that proper chlorination is done and residual chlorine at farthest point of distribution traces shall be available at all time.

c) Check for record of chlorination maintained or not .

d) Check for sufficient stock of disinfectant whether sufficient for next 5-7 days or not , if sufficient stock not available make necessary arrangements.

9. Machinery

a) Check for gland packing in pumps. .

b) Check for sounds of all pumping sets by running them one by one , if any abnormal sound is noticed , get it checked for bearings , coupling so as to avoid further damage .

c) Check grease cups , whether proper greasing is done or not .

10.

a) Check that all starters . main-switches , change-over and other electric appliances are in working order.

b) Check that there is no loose electric connection.

c) Check that the capacitors are in working order .

11.

a) Check for cleanliness of Water works .

c) Check that all the fittings like S.V., Air valves, non-return valves, foot valves etc. are in working condition. No leakage in any fitting. .

d) Check for routine repair of all structures, if any structure is damaged, it shall be repaired so as to discourage further damage.

e) Check for any leakage in distribution system or in pipe line at head works.

a) Attendance of Staff

b) Log Book for Running of Machinery including D.G. Sets

c) Stock Register of Disinfectants

d) Stock Register of Coagulants

e) Stock Register of other Consumables

f) Consumption Register of Disinfectants , Coagulants , Diesel etc.

g) Record of Residual Chlorine at Head Works and at various points of distribution

h) Raw Water record including running and closure of canal

i) Record of Electric Consumption (Units Consumed with energy meter reading)

j) Record for Cleaning / Backwashing of Filters

k) Record for various routine Maintenances such as desilting cleaning of Tanks/ Inlet Channel / Painting White washing etc.

DESIGN CALCULATIONS
FOR
CANAL BASED WATER SUPPLY SCHEME

. Forec

r. No.	Name of Town /Village	Population as per 2011 Census	Population 2015 (2% annual for Rural) (3% annual for urban)	Population 2030 (30% annual for Rural) (50% annual for urban)	Populat 2045 (50% annual fo (80% annual fo
1-	Village	P_1	$P_2 = 1.20\ P_1$	$P_4 = 1.30\ P_2$	$P_6 = 1.50$
2-	City	P_1	$P_3 = 1.30\ P_1$	$P_5 = 1.50\ P_3$	$P_7 = 1.80$

. Per capita De

55/70/110/135 LPCD

depending upon type of population and financing pattern .

. Demand per Day

1. For 15 years population -
   - Rural = P_4 x LPCD
   - Urban = P_5 x LPCD

   } Q_1

2. For 30 years population -
   - Rural = P_6 x LPCD
   - Urban = P_7 x LPCD

   } Q_2

4.

i) **Storage and Sedimentation Tank (S&S Tank)**

Daily demand = Q_1

Demand for 24 days = $Q_1 \times 24$

Add 25% for Evaporation losses = $0.25 \times Q_1 \times 24$

Total = $1.25 \times Q_1 \times 24 = Q_3$

Assuming no. of tanks = 2 Nos.

(Preferably minimum 2 Nos)

Capacity of each tank = $\frac{Q_3}{1000 \times 2} = Q_4$ m^3

Assigning depth of tank as **12' (3.66 m)**

Avg. X-Section area of Square Tank = $\frac{Q_4}{3.66} = A_1$ sq. m

Avg. Side of Sq. Tank = $\sqrt{A_1}$ = L mtrs. Say L_1 m

(Round off to next multiple

ii) **High Level Tank (HLT)**

Daily demand = Q_1

Half day demand = $Q_1/2$

Assume Number of HLT = 2 Nos.

Capacity of each Tank = Q_1 = Q_5
2x2

So Design HLT for Q_5 Capacity

Taking Standard depth as 6' or 1.83 mtr.

Circular Section

Let dia of tank = d m

$\frac{\pi d^2}{4} \times 1.83 = \frac{Q_5}{1000}$

Which gives value of d in mtrs.

Rectangular Section

Taking L:B : : 3:2

$3L \times 2L \times 1.83 = \frac{Q_5}{1000}$

We can calculate L in mtrs.

Length = 3L

Width = 2L

(Round off to next multiple of 0.5 m)

iii) Clear Water Tank (CWT)

Daily demand = Q_1

Half day demand = $Q_1/2$

Assume Number of CWT = 2 Nos.

Capacity of each Tank = Q_1 = Q_5
2x2

So Design CWT for Q_5 Capacity

Taking Standard depth as 8' or 2.43 mtr.

Circular Section

Let dia of tank = d m

$$\frac{\pi d^2}{4} \times 2.43 = \frac{Q_5}{1000}$$

Which gives value of d in mtrs.

Rectangular Section

Taking L:B : : 3:2

$$3L \times 2L \times 2.43 = \frac{Q_5}{1000}$$

We can calculate L in mtrs.

Length = 3L

Width = 2L

(Round off to next multiple of 0.5 m)

Filter Beds – Slow Sand

Daily demand	=	Q_1 Ltrs.
Rate of Filtration	=	100 litres/ sq m / hr
Area required	=	$Q_1 / 100 \times 24$ sqm
Add 33% stand bye Total Area	=	$1.33 \times Q_1 / 100 \times 24$ sqm
Assume Number of Filter Beds	=	3 Nos. (Minimum 2 Nos.)
Area of each Filter $= \frac{1.33\ Q_1}{100 \times 24 \times 3}$	=	A_3 sq. m.

Circular Section

Let dia of F.Bed = d m

$\frac{\pi d^2}{4}$ = A_3

Which gives value of d in mtrs.

Rectangular Section

Taking L:B : : 3:2

3L x 2L = A_3

We can calculate L in mtrs.

Length = 3L

Width = 2L

Round off to next multiple of 0.5 m

v) **Baffle type Basin (round the end type)**

Daily quantity to be treated = Q_1 lltr.

Detention period = 20 minutes

Vel. (avg.) = 25cm / Sec.

Quality of water to be handled in the basin

$$= \frac{Q_1 \times 20}{24 \times 60} \quad V_1$$

Total distance of flow of water (for 20m D.T. & 25m / Sec V)

= 20 x 60 x 25 = 300mtr.

X-Sectional area of channel between baffles

$$= \frac{V_1}{300} = a_1$$

Let distance between baffles = 0.45m

∴ Depth of channel a1 = l_1

Let basin divided into two halves by central longitudinal wall, width of each (let – 3 mt.), if clear distance between baffle and end of wall is taken as 0.15 mtr the distance betw baffle i.e. 0.15 x 0.45 = 0.675 mtr then eff. length of each channel = 3 – 0.675 = 2.325 mt.

No. of channels required $\frac{300}{2.325} = 116$

Or 58 channels in each half –

Clear length of basins = 58 x 0.45 = 26.10 mtr.

Assuming 7.5 cm width of baffle total inside length = 26.10 + 57 x 0.75 = 30.37 mtr.

So provide basin of size (L X B X D) – 30.37 x 3 x l_1

vi) Sedimentation Tank –

Vol. of water to be treated = Q_1 lltr.

Per hour vol. of water to be treated = $\frac{Q_1}{24}$ = q_1

Let total depth = 4.2m allowing 0.6m for sediment deposit

Effective depth = 4.2 – 0.6 = 3.6 mtr.

Surface area = $\frac{q_1}{3.6}$ = a_1

Keep B/L = ¼ which will give B & L

∴ Overflow rate provided = $\frac{Q1}{L \times B}$ Q_2 = liters / m^2 /day

Which shall be less than 50000 ltr / m^2 / day

vii) Rapid sand filters

Design discharge = Q_1 MLD

Assuming 4% as wash water allowance ½ hr. for back wash

Total quantity to be treated

$$= \frac{Q_1 \times 1.04 \times 24}{23.5} = Q_2$$

Rate of Filtration = 5000 ltr / m^2 / hr.

$$\therefore \text{filtration area required} = \frac{Q2}{24 \times 5000} = A_1$$

Assume 2 No. units L/B = 1.50

then L x B x 2 = A_2

$A_2 < A_1$

Under drains

Total area of perforations

= 0.2% of filter area

= $0.2/100 \times A_2 = a_2$

Area of manifold may be taken as twice of the area of laterals = a_3

area of manifold = $4 \times a_2 = a_4$

laterals may be assumed having spacing of 15 cms (max. 30 cms)

$\therefore$ total no. of laterals = $\frac{L \times 100}{15}$ = n_1 on either side of manifold or $2x_1$ for 1 unit

Length of lateral = ½ width of filter - ½ dia of manifold = l_1

Let n be total no. of perforations of 13mm

Total area of perforations = a_2

$\therefore \quad n \times \pi/4 \times 1.3^2 = a_2 \times 100^2$

which gives n –

No. of perforations per lateral $= \dfrac{n}{2x_1} = n_2$

Area of perforations per lateral

$n_2 \times 1.3^2 \times \pi/4 = a_5$

Area of lateral = 2 = area of perforations per lateral

$= 2 \times a_5 = a_6$

$\therefore$ Dia of lateral = $\pi/4\ d^2 = 2 \times a_5$ which gives d

$$\frac{\text{Length of lateral}}{\text{Dia of lateral}} = X < 60$$

Let. rate of washing be 45cm / mt.

Wash water discharge $= \frac{45 \times L \times B}{100 \times 60} = q_3$

Vol. of flow in laterals $= \frac{q_3 \times 10000}{2x_1 \times a_6} = V_4$

Vol. of flow in manifold $= \frac{q_3}{a_4}$

shall be 1.8 – 2.4m / sec.

Wash water trough

Troughs are generally not more than 1.8m apart.

$\therefore$ No. of troughs = L / 1.8 = Say y

Discharge per trough = $\frac{q_3}{y} = q_4$

For a flat bottom trough

q_4 (in lpm) = $0.76\ bt^{2/3}$

b = width

& t = depth of water

b – may be assured 20 – 30 cms

Which gives t –

Total depth may be provided as t + 5 cm including free board of cms.

b – may be assured 20 – 30 cms

Which gives t –

Total depth may be provided as t + 5 cm including free board of cms.

viii) **Inlet Channel (I/C)**

Daily demand = Q_2

Add 25% for Evaporation losses = 1.25 x Q_2 Ltrs.

Taking 24days Closure and 8 days running

Design Discharge for Inlet Channel = 1.25 Q_2 x 32/ (1000 x 8x 24 x 3600) Cumec

Circular Section

For design discharge , choose from Standard tables the required size which gives mini. 1.5 m/sec velocity at certain gradient which is allowed as per site conditions .

Rectangular Section

Assume certain size say Bx H leaving 0.08 - 0.15 m free board

X-Section area = A = B x H

Wetted Perimeter = P = B+ 2H

Hydraulic Mean Depth = R = A/P

Calculate $\sqrt{R}$ and adopt gradient as available then from standard tables find corresponding **N** and **D**

Find corresponding Velocity and check for discharge if it comes more than and close to design value then OK otherwise revise the section as the case may be i,e if it much more than design try with smaller size and if less than increase the size and recheck

ix) **Over Head Service Reservoir (OHSR)**

Daily demand	=	Q_2 Liters
Half of the daily demand	=	$Q_2 / 2$ Liters

Provide OHSR for this much capacity

x) Machinery

a) Raw Water

Daily Demand	=	Q_1	Liters
Pumping Hours	=	6	hours
Pumping Capacity per minute = $Q_1/6 \times 60$	=	X	Lpm
Required Head	=	12	m

BHP of Motor = $\gamma \times Q \times h / 75 \times 60 \times \eta_p$

where γ - sp gr. of water taken as 1.0

Q - pumping cap Lpm

h – head in mtrs.

η_p – efficiency of pump 60%

a) Clear Water

Daily Demand	=	Q_1	Liters
Pumping Hours	=	6	hours
Pumping Capacity per minute = $Q_1/6 \times 60$	=	X	Lpm
Required Head	=	Static + Suction +Friction loss Normally comes as 40–50 m	

Again calculate BHP of Motor using same formula

$$BHP = \gamma \times Q \times h / 75 \times 60 \times \eta_p$$

a) Suction Delivery for Pumping sets

Normally one to two step up size of pump is provided as suction and delivery as one step up that of pump size .

Suction size is calculated using following formula keeping max. velocity as 2 m/sec and for delivery the velocity may be kept as 2.5 m/sec .

Q (Discharge) = Velocity x Area

Since Area = $\pi \times d^2 / 4$

So Q = Vel. $\times \pi \times d^2 / 4$

Calculate d and provide next nearest available size as required size

xi) Distribution System

Distribution is designed using standard design tables with minimum velocity in any pipe as 0.60 m./ sec. Every Care be taken to have Minimum terminal head at tail as prescribed as per norms

K. KISHORE